AMATEUR RADIO

JULY 1992

RRP $3.25

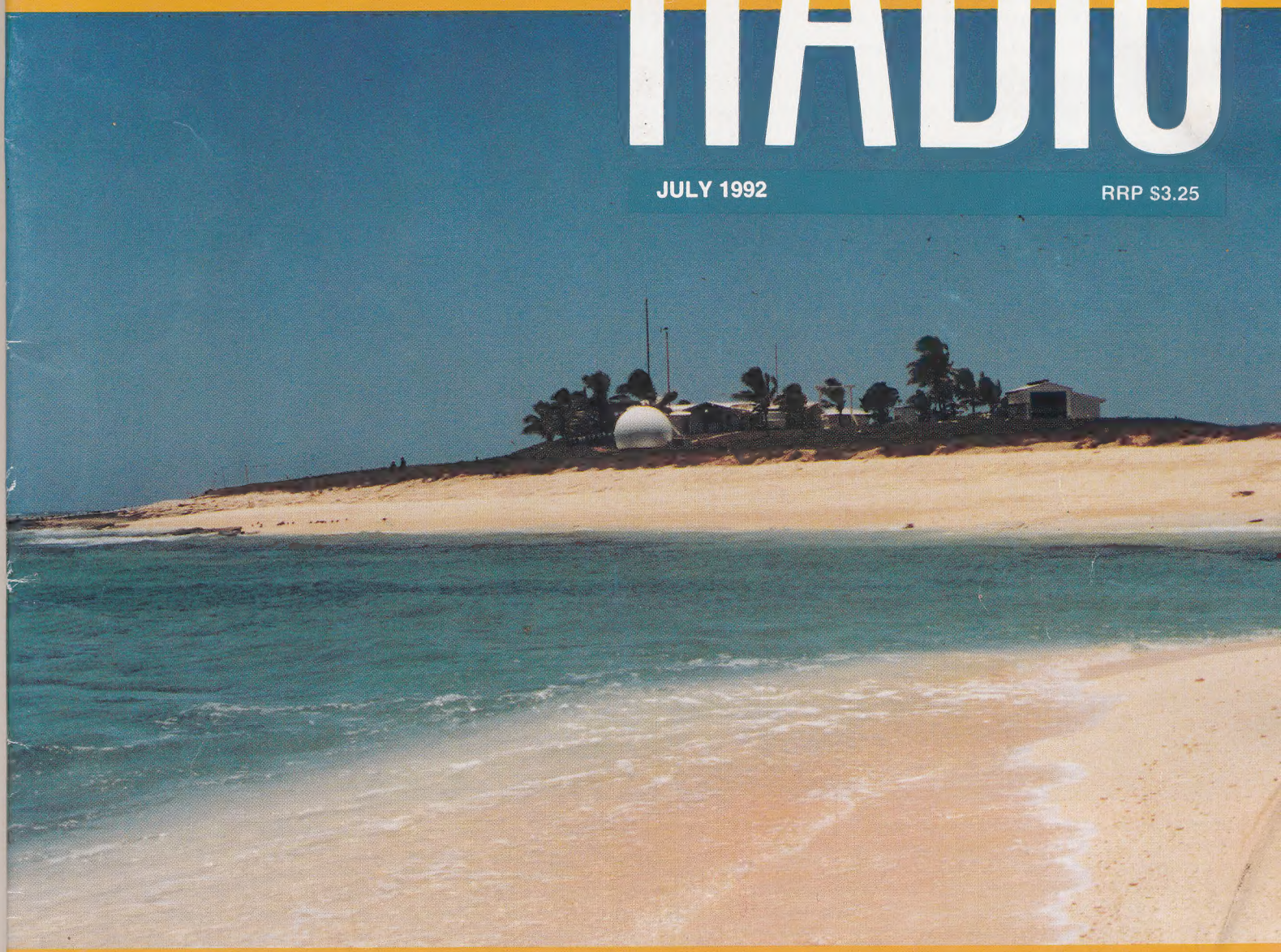

- Cavity Filters & Pager Interference
- The Australian Traveller's Net
- Willis Island Story

WIRELESS INSTITUTE OF AUSTRALIA

THE WIA RADIO AMATEUR'S JOURNAL

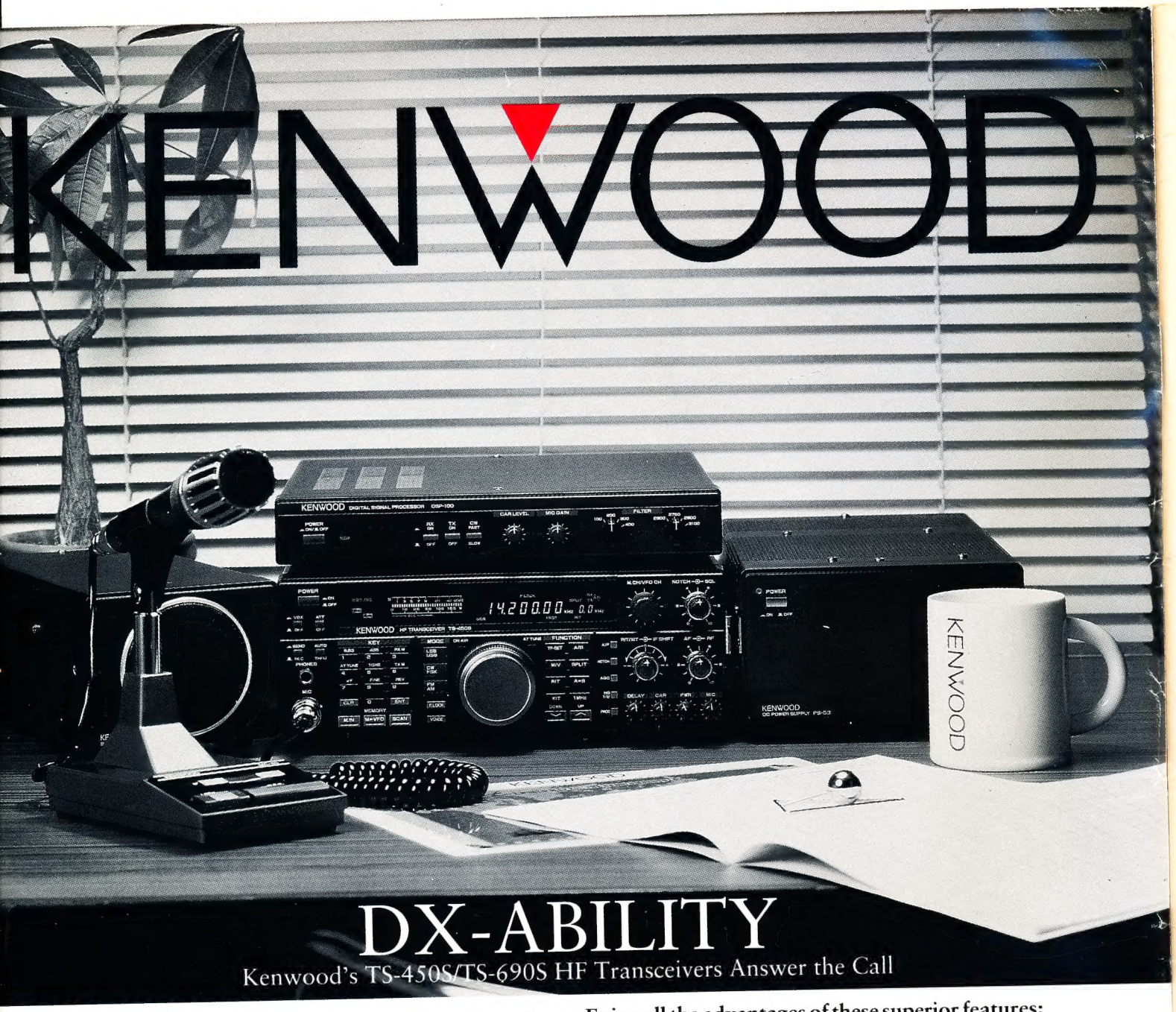

DX-ABILITY

Kenwood's TS-450S/TS-690S HF Transceivers Answer the Call

Wherever you are, whatever the situation, you can always count on Kenwood's TS-450S and TS-690S for tough, dependable performance. Products of world-famous Kenwood engineering, these versatile HF transceivers are designed for SSB, CW, AM, FM and FSK modes of operation on all Amateur bands, including the WARC bands. To further enhance capabilities, choose the optional DSP-100 Digital Signal Processor. The AT-450 Automatic Antenna Tuner is built into the TS-450S, and is available as an internal option for the TS-690S. Along with multi-function operation and the highest levels of quality and performance, both models offer yet another advantage: ultra-compact dimensions ideal for DXpeditions and mobile use.

Enjoy all the advantages of these superior features:

■ Superior receiver dynamic range of 108dB ■ Kenwood's exclusive AIP (Advanced Intercept Point) system ■ General coverage receiver ■ Automatic antenna tuner (TS-450S only) ■ Inbuilt automatic ATU option (TS-690S only) ■ Ultra-compact design ■ Excellent split frequency operation ■ CW pitch and CW reverse mode selection ■ Digital bar meter and multi-function LCD display ■ IF shift circuit ■ Dual-mode noise blanker (pulse or 'woodpecker') ■ 1Hz fine tuning ■ 100 memory channels ■ 100 watts output on all HF bands ■ 50 watts output on 50 to 54 MHz six metre band (TS-690S only)

HF TRANSCEIVER **TS-450S/TS-690S** HF TRANSCEIVER

KENWOOD ELECTRONICS AUSTRALIA PTY. LTD.
(INCORPORATED IN N.S.W.)

8 Figtree Drive, Australia Centre, Homebush, N.S.W. 2140
Phone (02) 746 1519, (02) 746 1888, Fax (02) 746 1509
Call now for further information and the name of your nearest authorised Kenwood dealer.

Kenwood Electronics Australia Pty Ltd only warrants products purchased from their authorised Australian dealers.

Please phone, mail or fax for information
Name.....
Address.....
..... Postcode.....
Publication..... Issue .....
Model.....

AMATEUR RADIO

THE WIA RADIO AMATEUR'S JOURNAL

Vol 60 No 7 ISSN 0002-6859 July 1992

Amateur Radio is published by the Wireless Institute of Australia, ACN 004 920 745 as its Official Journal, on the last Friday of each month.

EDITORIAL GROUP

Publisher
Bill Roper VK3ARZ

Editor
Bill Rice VK3ABP

Managing Editor
Graham Thornton VK3IY

Seior Technical Editor
Peter Gibson VK3AZL

Technical Editors
Evan Jarman VK3ANI
Gil Sones VK3AUI
Bob Tait VK3ERG

Marketing
Norm Eyres VK3ZEP
Bruce Kendall VK3WL

Contributing Editor
Ron Fisher VK3OM

ASSOCIATE TECHNICAL EDITORS
David Brownsey VK4AFA
Don Graham VK6HK
Peter O'Connor VK4KIP
Phil Steen VK4APA
Roy Watkins VK6XV

PROOF READERS
Allan Doble VK3AMD
Jim Payne VK3AZT
John Tutton VK3ZC

DRAFTING
Vicki Griffin VK3BNK

ADVERTISING
Brenda Edmonds VK3KT
June Fox

CIRCULATION
Margaret Allen
Chris Russell VK3LCR

All contributions and correspondence concerning the content of *Amateur Radio* should be forwarded to:

Amateur Radio
PO Box 300
Caulfield South Vic 3162

REGISTERED OFFICE
3/105 Hawthorn Road
Caulfield North Vic 3161
Telephone: (03) 528 5962
Fax: (03) 523 8191

Business hours: 9.30am to 3pm weekdays

Deadlines	Editorial	Hamads
August	13/7/92	15/7/92
September	10/8/92	12/8/92
October	7/9/92	9/9/92

Delivery of *AR*: If this magazine is not received by the 15th of the month of issue, and you are a financial member of the WIA, please check with the Post Office before contacting the registered office of the WIA.

© Wireless Institute of Australia 1992

CONTENTS

Technical

Measurements on Balanced Lines Using the Noise Bridge & SWR Meter 8
Lloyd Butler VK5BR

Pager Interference Part I 13
Ron Henderson VK1RH

Telecom Pagers Cause Much Anguish for 2m Operators 15
Rodney Champness VK3UG

2m Cavity Preamplifier
Mal Le Maistre VK3KSA 16

A Support for the Rotary Beam
JA Gazard *52*

General

14.116 The Australian Traveller's Net 19
Fred Greening VK2DZL

Willis Island – VK9 23
Stephen Pall VK2PS

The Story of Stephen Frith Part 4 27
H Karl Saville VK5AHK

The Horrors of CW 29
Julie Kentwell VK2ISI

Operating

Awards 36
Contests
1992 Remembrance Day Contest Rules 36
1992 VK-ZL-Oceania DX Contest 37
16th WA 3.5MHz Contest Rules 38
1992 John Moyle Field Day Results 38

Columns

Advertisers' Index 56
ALARA 45
AMSAT 43
Club Corner 47
Divisional Notes
VK2 Notes, VK3 Notes, 5/8 Wave . 48
VK6 Notes 49
Editor's Comment 2
Education Notes 44
FTAC Notes 44
Hamads 54
Intruder Watch 34
Morseword No 64 51
Murphy's Corner – Errata 35
Over to You – Members' Opinions 50
Pounding Brass 42
QSLs from the WIA Collection 47
Repeater Link 46
Silent Keys – Obituaries 49
Spotlight on SWLing 45
Stolen Equipment 51
VHF/UHF an Expanding World 40
WIA Directory 2, 3
WIA News 3
WIA QSL Bureaux 56

Cover

Willis Island – A tiny speck in the Pacific Ocean. See Willis Island – VK9 by Stephen Pall VK2PS on P23.

Amateur Radio Service

A radiocommunication service for the purpose of self-training, intercommunication and technical investigation carried out by amateurs, that is, by duly authorised persons interested in radio technique solely with a personal aim and without pecuniary interest.

Wireless Institute of Australia

The world's first and oldest National Radio Society
Founded 1910

Representing the Australian Amateur Radio Service — Member of the International Amateur Radio Union
Registered Federal Office of the WIA:
3/105 Hawthorn Road, Caulfield North, Vic 3161

All mail to:
PO Box 300, Caulfield South, Vic 3162.
Telephone: (03) 528 5962
Fax: (03) 523 8191

Business Hours: 9.30am to 3.00pm on weekdays

General Manager and Secretary:
Bill Roper VK3ARZ

COUNCIL

President:	Ron Henderson	VK1RH
VK1 Federal Councillor:	Rob Apathy	VK1KRA
VK2 Federal Councillor:	Terry Ryeland	VK2UX
VK3 Federal Councillor:	Peter Maclellan	VK3BWD
VK4 Federal Councillor:	Murray Kelly	VK4AOK
VK5 Federal Councillor:	Bill Wardrop	VK5AWM
VK6 Federal Councillor:	Neil Penfold	VK6NE
VK7 Federal Councillor:	Jim Forsyth	VK7FJ

FEDERAL CO-ORDINATORS

AMSAT:	Graham Ratcliff	VK5AGR
Awards:	John Kelleher	VK3DP
Contest Manager:	Neil Penfold	VK6NE
Education:	Brenda Edmonds	VK3KT
EMC:	Hans Ruckert	VK2AOU
Federal Tapes:	Ron Fisher	VK3OM
FTAC:	John Martin	VK3ZJC
Historian:	John Edmonds	VK3AFU
Honorary Legal Counsel	George Brzostowski	VK1GB
IARU	Kevin Olds	VK1OK
Int'l Travel Host Exch:	Ash Nallawalla	VK3CIT
Intruder Watch:	Gordon Loveday	VK4KAL
QSL Manager (VK9, VK0)	Neil Penfold	VK6NE
Standards:	Roger Harrison	VK2ZTB
Videotapes:	John Ingham	VK5KG
WARC & CCIR	David Wardlaw	VK3ADW
WICEN:	Leigh Baker	VK3TP

Editor's Comment

Bill Rice VK3ABP

Big Country, Small World

RON FISHER VK3OM and I are now well into the sun-chasing safari which began on Friday 22 May. Late that night my XYL Margaret and I joined Ron and Lynette in one of Albury's caravan parks, and next day continued in convoy.

Our first tourist destination was the Japanese memorial garden at Cowra, but the night before, at dinner in the Services Club, we noticed at the next table a gentleman wearing a WIA windcheater! Who should it be but Tom Dowling VK4OD and XYL Nancy on their way home from the 50th anniversary RAAF Radar Reunion. You will read all about this celebration in a near-future issue of *AR*.

After visiting the gardens (a truly magnificent little piece of Japan transplanted to Australia) we also looked at the nearby war cemetery, and then set out for Parkes (some 130km away) where we visited the CSIRO radio telescope with its 64m dish. Later, arriving at Dubbo for two nights, we were spotted by Ron VK4NRD, also in the same caravan park en-route to Bendigo.

We spent most of Monday 25 May at the very impressive Western Plains Zoo, then went on to Coonabarabran and the Warrumbungles National Park on Tuesday. This proved to be quite an amateur get-together! Gordon VK3GRJ was also spending a few days there, while another Gordon, VK2TGC at Gilgandra, gave us useful information about the local roads. We visited the Siding Spring Anglo-Australian Astronomical Telescope on 27 May. With a mirror diameter of 3.9 metres, this is the largest such telescope in the southern hemisphere, and the building which houses it is 50 metres high. Twenty-seven astronomers are currently working there, and the scheduling of time on the instrument must be a major feat of administration!

In the car park, as we prepared for our Travellers' Net check-in, we met VK4AO. A nephew of the famous aviator of some 60 years ago, Bert Hinkler, his name is also Bert Hinkler. A prospective amateur couple near us in the Warrumbungles were old friends and colleagues of our general manager, Bill VK3ARZ. Later, at Bourke (another 400km) we met people from Murray Bridge (VK5), friends of my sister's family in that town.

The coincidences eased a little after that. The next four nights were at Cunnamulla, Charleville, Blackall and Longreach. Who should be among the first people we saw at Longreach, but friends from our own suburb of Melbourne? They live 'just around the corner' from us!

I am writing this on 3 June at Longreach, home of Eddie VK4KAA, who makes a very tasty nut-loaf! 'As the crow flies' it is just 1000 miles or 1600km from Melbourne. We have covered 2600km of roads to get here. By the time we arrive home, in mid-July, we will have travelled about 10,000km through all states but WA and Tasmania. Yet every day we will have 'kept in touch' via the 20m Travellers' Net; and nearly every day Ron will have made contact on 20m with friends in the UK (notably G4JNH, GW4DJW). Australia is truly a 'big country', but amateur radio makes the whole globe a 'small world'. **ar**

WIA News

From the WIA Federal Office

Role of the ITU

IN THE FEBRUARY ISSUE of Amateur radio magazine, we quoted from the Calendar of the IARU on improper use of the amateur bands. It was not stated at the time that the material had been prepared by Michael Owen VK3KI, who is now the vice-president of the IARU. It is perhaps worth quoting Michael's first two paragraphs.

1. The ITU is not a police force.

The International Telecommunications Union exists by virtue of an agreement between nations to cooperate on telecommunications matters. This agreement has been entered into freely by most of the sovereign nations of the world. However, by agreeing to respect the regulations and to use the mechanisms of the ITU, these nations have not relinquished their sovereignty. Each country reserves the right to do what is necessary to protect its own vital national interests, and to determine for itself what those interests are.

Thus the ITU has no enforcement authority. ITU officials and staff may educate an administration that is responsible for stations causing harmful interference outside its borders. They may encourage an administration to take corrective action. But they may not force an administration to act.

2. Our mission as radio amateurs is to persuade administrations to protect our interests.

When radio amateurs suffer harmful interference from stations operating in violation of ITU Radio Regulations, it is the national telecommunications administrations, and not the ITU, that have the power to provide relief. Each IARU member-society is obligated to promote the objectives of the IARU: the protection, promotion, and advancement of the Amateur and Amateur-Satellite Services within the framework of regulations established by the ITU. Part of this obligation is to seek the assistance of your own national telecommunications administration in resolving interference problems caused by improper use of Amateur Radio allocations. (In some countries, there may be only limited opportunities to seek such assistance. In particular, it should be remembered that no member-society is ever required to act in a manner that is contrary to the laws of its country.)

The IARU Resolution 91-1 which followed from the discussions details procedures to

WIA DIVISIONS

The WIA consists of seven autonomous State Divisions. Each member of the WIA is a member of a Division, usually their residential State or Territory, and each Division looks after amateur radio affairs within their State.

Division	Address	Officers		
VK1	ACT Division GPO Box 600 Canberra ACT 2601 Phone (06) 247 7006	President Secretary Treasurer	Christopher Davis Jan Burrell Ken Ray	VK1DO VK1BR VK1KEN
VK2	NSW Division 109 Wigram St Parramatta NSW (PO B ox 1066) Parramatta 2124) Phone (02) 689 2417 Fax (02) 633 1525	President Secretary Treasurer (Office hours	Roger Henley Bob Lloyd-Jones Bob Taylor Mon-Fri 1100-1400 Wed 1900-2100)	VK2ZIG VK2YEL VK2AOE
VK3	Victorian Division 40G Victory Boulevard Ashburton Vic 3147 Phone (03) 885 9261	President Secretary Treasurer Office hours 0830-1530 Tue & Thur	Jim Linton Barry Wilton Rob Hailey	VK3PC VK3XV VK3XLZ
VK4	Queensland Division GPO Box 638 Brisbane Qld 4001 Phone (07) 284 9075	President Secretary Treasurer	John Aarsse Ken Ayers David Travis	VK4QA VK4KD VK4ATR
VK5	South Australian Division 34 West Thebarton Rd Thebarton SA 5031 (GPO Box 1234 Adelaide SA 5001) Phone (08) 352 3428	President Secretary Treasurer	Rowland Bruce John McKellar Bill Wardrop	VK5OU VK5BJM VK5AWM
VK6	West Australian Division PO Box 10 West Perth WA 6005 Phone (09) 388 3888	President Secretary Treasurer	Cliff Bastin John Farnan Bruce Hedland-Thomas	VK6LZ VK6AFA VK6OO
VK7	Tasmanian Division 148 Derwent Ave Lindisfame Tas 7015	President Secretary Treasurer	Tom Allen Ted Beard Peter King	VK7AL VK7EB VK7ZPK
VK8	(Northern Territory) is part of the VK5 Division and relays broadcasts from VK5 as shown (received on 14 or 28MHz).			

Note: All times are local. All frequencies MHz.

Weekly News Broadcasts	1992 Fees	
3.570MHz 2m ch 6950 Rebroadcast Mondays 8pm 70cm ch 8525 2000 hrs Sun	(F) (G) (S) (X)	$70.00 $56.00 $42.00
From VK2WI at 1045 and 1915 on Sunday on the following frequencies and modes: (*1045 only) 1.845 AM; 3.595 AM morning and SSB evenings; 7.146 AM*; 10.125 SSB; 24.910 SSB; 28.320 SSB; 52.120 SSB; 52.525 FM; 144.120 SSB; 147.000 FM; 438.525 FM; 1281.750 FM; On relay on behalf of VK2WI on 18.120 SSB; 584.750 ATV Sound, Ch 35, Sydney region. Plus automatic relays to 2m repeaters surrounding Sydney and manually to many country repeaters. News headlines by phone (02) 552 5188; General Divisional information (02) 651 1489.	(F) (G) (S) (X)	$66.75 $53.40 $38.75
1.840MHz AM, 3.615 SSB, 7.085 SSB, 147.250 FM(R) Mt Macedon, 147.225 FM(R) Mt Baw Baw 146.800 FM(R) Mildura 146.700 FM (R) MT. Dandenong 438.075 FM(R) Mt St Leonard 1030 hrs on Sunday	(F) (G) (S) (X)	$72.00 $58.00 $44.00
1.825, 3.605, 7.118, 10.135, 14.342, 18.132, 21.175, 24.970, 28.400, MHz 52.525 regional 2m repeaters and 1296. 100 0900 hrs Sunday Repeated on 3.605 & 147.150MHz, 1930 Monday	(F) (G) (S) (X)	$70.00 $56.00 $42.00
1820kHz 3.550MHz, 7.095, 14.175, 28.470, 53.100, 145.000, 147.000 FM(R) Adelaide, 146.700 FM(R) Mid North, 146.900 FM(R) South East, ATV Ch 34 579.000 Adelaide, ATV 444.250 Mid North Barossa Valley 146.825, 438.425 (NT) 3.555M 146.500, 0900 hrs Sunday	(F) (G) (S) (X)	$70.00 $56.00 $42.00
146.700 FM(R) Perth, at 0930 hrs Sunday, relayed on 3.560, 7.075, 14.115, 14.175, 21.185, 28.345, 50.150, 438.525MHz. Country relays 3582, 147.350(R) Busselton 146.900(R) Mt William (Bunbury) 147.225(R) 147.250(R) Mt Saddleback 146.725(R) Albany 146.825(R) Mt Barker Broadcast repeated on 146.700 at 1900 hrs	(F) (G) (S) (X)	$60.75 $48.60 $32.75
146.700MHz FM (VK7RHT) at 0930 hrs Sunday relayed on 147.000 (VK7RAA), 146.750 (VK7RNW), 3.570, 7.090, 14.130, 52.100, 144.100 (Hobart) Repeated Tues 3.590 at 1930 hrs	(F) (G) (S) (X)	$67.00 $53.65 $39.00

Membership Grades

Full	(F)	Pension	(G)
Needy	(G)	Student	(S)
Non receipt of AR	(X)		

Three-year membership available to (F) (G) (X) grades at fee x 3 times

be followed in notifying improper band use to the Monitoring Service, and action that will be taken by the IARU.

Do You QSL?

The Federal Awards Manager recently advised he has received many complaints from overseas about the low rate of QSLing by Australian amateurs. (A letter from an English SWL on this subject was published in the April 1992 issue of Amateur Radio magazine).

Historically, it was traditional that all first contacts were confirmed by the exchange of QSL cards, but this custom seems to be declining. This should not be due to the costs of postage when the QSL Bureaux are functioning, but it may be because of the current high costs of getting cards printed. Members should be aware that, for confirmation for award purposes, a received card can be endorsed "Confirmed", signed and returned through the Bureau for practically no cost. Members who do not intend to QSL should advise their contacts of this at the time rather than simply not replying to cards received.

Chain Letters

Information reached the Federal Office recently from a member that a chain letter, labelled "for Hams only", is in circulation. It appears to be using callsigns picked at random, and requires the recipient to send money to the other names on the list. Be warned that this type of operation does not find favour with the authorities, and do not be "conned" into going along with it.

Looking for that Article?

The WIA "20 year" index is now a 24 year index. It includes all articles published in Amateur Radio magazine since 1968, listed in over 25 categories. Members who wish to trace articles without having to go through annual indices for several years may obtain copies of the index either on IBM format computer disk (in ASCII or .DBF), or as a hard copy printout. Disks cost $10.00 each, the printout $5.00, including postage.

News from the IARU

As a result of a recent poll of member societies, the IARU has announced that the Lithuanian Amateur Radio society has been admitted to membership, making a total of 129 member-societies.

At the Region 3, October 1991 meeting in Bandung, it was recommended that the Secretary of the IARU write to the Burma Amateur Radio Transmitting Society, at its last known address, stating that it is no longer seen as representing the interests of its radio amateurs, and that its rights as an IARU member-society are suspended. As the Secretary's letter has been returned as undeliverable, the IARU Calendar of 15th May 1992 gives notice that this suspension has been carried out.

The Eleventh International Wroclaw Symposium and Exhibition on Electromagnetic Compatibility will be held in Wroclaw, Poland on 2 - 4 September 1992. Included in the program is a session on "EMC in Amateur Radio Service". The organiser is Henryk Cichon, SP9ZD, Convenor of the IARU Region 1 EMC Working Group

Radio Frequency Band Plans

The DoTC Newsletter for May 1992 announces changes to the band plans for the VHF Mid Band (70 - 87.5 MHz) and VHF High Band (148 - 174 Mhz). The introduction of a two-frequency operation with narrower 12.5 kHz channelling over much of the bands is expected to help make spectrum space available for mobile services in areas of high demand.

1992 VK Novice Contest

This is a reminder that logs for the popular VK Novice Contest, which took place over the weekend of 20th and 21st June, must reach the Contest Manager by 26th July 1992.

1992 Remembrance Day Contest

Talking of contests, have you started your preparations yet for the big contest of the year, the 1992 RD Contest? This year's contest will be held on 15 - 16th August, and the rules appear in this issue of Amateur Radio magazine. Make sure you know where to find them when the Contest date arrives.

WIA Membership

Analysis of WIA membership figures over the past couple of years reveals that, although the number of licensed amateurs in Australia is still increasing, the percentage of the amateur population that maintains its WIA membership is slowly decreasing.

As at 31st December 1991, DoTC figures show a total of 17569 individual amateur radio stations. At that time, the WIA membership stood at 6758, ie, about 38.5 %. This figure approaches more nearly to 50 % when inactive operators and multiple callsigns are taken into account, but it still adds up to the fact that less than half the licensed amateurs in Australia are carrying all the costs of WIA activities such as WARCs, international representation, DoTC liaison, and bandplanning which benefit all Australian amateurs.

Also of concern is the data that shows the non-renewal of WIA membership is highest among the newer members, that is those of only one or two years membership standing. It may be that this group is more apt than members of long standing to feel the effects of the current economic situation, but this seems unlikely. Apparently the strength of the WIA is in the members who have been around for 5 years or more. After that time, members seem to drop out only in response to severe financial pressure, a loss of interest in amateur radio as a leisure time activity, or strong dissatisfaction with some aspect of the WIA.

What does the WIA have to do to hold the new members for 5 years? The WIA would be interested to hear members' ideas on either the reasons for the membership losses, or ways of providing improved services which may help to reduce the loss.

Incidentally, it is worth noting that the membership analysis shows the most effective membership recruiting, and presumably retention, is that carried out on a personal basis by committed members. When was the last time YOU signed up a new WIA member?

Advertisers in Amateur Radio

Amateur radio magazine is always happy to print advertisements from members, whether or not they relate to radio equipment. Rates for advertisements for any size from business card to full page are available from the Federal Office. Members are requested, also, to inform dealers who advertise with the magazine that their advertisements are noticed. Leads for new advertisers supplied by members will be promptly followed up.

Deregulation of Licence Conditions

Members are reminded that responses to the draft

deregulated licence conditions published in the June edition of Amateur Radio magazine, should reach the DoTC by 17th July. Please remember to also send a copy of any comments you forward to the DoTC to the WIA Federal Office so that we are aware of members' views.

Thank you to those eagle eyed members who pointed out the apparent curtailing of the bands for Unrestricted licensees. No, this was not a result of secret deals between the WIA and the DoTC to limit the activities of unrestricted licensees. It was an error in the deletion of some duplications that had occurred at the typesetting stage, and there was NO ulterior motive.

The "missing" bands were clearly shown in the adjacent listings of frequencies for Limited and Combined licensees.

It is suggested that the small handful of vocal WIA knockers do their best to recover from the excess of adrenalin brought on by this typesetting error, and cast around for something else to complain about.

Intruder Watch

One of the matters raised with the DoTC representatives at the May WIA Federal convention was the action taken on Intruder Watch reports. Although DoTC takes action on many of the confirmed reports, the priorities of other countries may differ from ours, so there is no guarantee that any other administration will take action.

In addition to the WIA, the DoTC also finds it unsatisfactory when no response is received from other administrations in answer to approaches made on the basis of reports from WIA Intruder Watchers. However, the DoTC has agreed to provide the WIA with as much information as possible on the results of action taken.

If you wish to provide a valuable service to amateur radio, why not join the Intruder Watch team. You can do that by contacting the Federal Intruder Watch Co-ordinator, Gordon Loveday VK4KAL, QTHR.

RF Pollution

One of the working parties set up at the WIA Federal Convention identified RF Pollution as a matter of high priority for the WIA's consideration. With the rapidly increasing usage of RF in commerce as well as communications, it was seen as appropriate for the WIA to place a high priority on lobbying for standards and controls on such devices and their use.

SEANET '92

In the June 1992 edition of Amateur Radio we advised the address for information for contacts for SEANET '92. Please note that Jim Jones, the Secretary, can be reached at PO Box 37317, Winnellie, not 37173 as given.

Next Shuttle Flight

STS-50, the next SAREX Shuttle Flight, was scheduled for launch on 22nd June 1992. The Shuttle Amateur Radio Experiment is a secondary payload to the shuttle's main mission, a microgravity laboratory.

On board will be Commander Richard Richards, KB5SIW and Mission Specialist Ellen Baker KB5SIX. On packet the call sign used will be W5RRR-1: SSTV will use W5RRR/S.

Heath Company Alive.

Despite contrary reports, the Heath company is alive and well, according to a recent ARRL News Letter. The company's President has recently announced that the company is changing its focus from "the rapidly shrinking electronics kit business to the burgeoning electronics education market." We reported some time ago that the production of Heathkit products was ceasing.

The President feels that the age of the kit is now past because the prices of assembled electronic products are now so low.

Interference Handbook

The ARRL has recently published a new edition of "Radio Frequency Interference". Members wishing to obtain this valuable reference should contact their WIA Divisional Bookshops. Arrangements have been made for a review to be published in an early issue of Amateur Radio magazine.

Callsign Number Plates

In the January 1990 issue of Amateur Radio magazine, I announced that Victorian amateurs could now obtain car licence plates featuring amateur callsigns. At that stage orders were being accepted for "custom" plates, in various colours, at a once-only cost of $280.00.

A few enquiries have recently been received about these callsign number plates from amateurs who were refused a plate, being told by the RTA that a personalised number plate could not have a number except as the last digit.

This may be true for "nor-

Position Vacant

Consequent on Graham Thornton's resignation, there has been some re-organisation of the Federal Office staff, and there is a vacancy as follows:

POSITION:	Part Time clerical at assistant manager level
LOCATION:	WIA Federal Office in Caulfield
HOURS:	Three days a week average - hours negotiable
REMUNERATION:	Above award rates plus superannuation
QUALIFICATIONS:	Essential Superior English skills Keyboarding experience Desirable Knowledge of amateur radio and the WIA

In addition, the appointee for this challenging and exciting position will be a dedicated, hard working team member with a sense of humour.

ENQUIRIES:	(03) 528 5962 between 9.30 am and 3.00 pm on weekdays
APPLICATIONS:	In writing, with CV, to: WIA PO Box 300 Caulfield South VIC 3162.

mal" personalised number plates, but an exemption from this rule was obtained for "radio callsign" plates, and many amateurs' cars in Victoria are sporting callsign number plates, including VK3ARZ.

Members are directed to any Road Transport Authority office, and should firmly insist that the "radio callsign" provision has been in place for some time.

The Federal Office is not aware of the provisions for such a service in other States, and would be interested to hear about what is available.

Managing Editor Resigns

It is with sincere regret the WIA announces that, after three years of dedicated, strenuous effort in putting together Amateur Radio magazine every month, Graham Thornton VK3IY has decided to resign from the position of Managing Editor in order to devote more time to a commercial project. Graham stepped in to assist when the magazine was recovering from a change in the previous publishing arrangements, and immediately made his expertise and experience felt.

Graham also made his presence felt as part of the staffing of the Federal Office, and as overseer of the team which proofreads each issue of the WIA journal.

The WIA thanks Graham for his hard work and continual efforts to improve the magazine, and wishes him success in his new venture. We have been promised that there will still be contributions to "Knutshell Knowledge" from Graham.

Contributors Please Help

The July issue of Amateur Radio magazine will be Graham's last production. Until a new appointment is made, the magazine will be put together by the Publisher, Bill Roper, the Editor, Bill Rice, and Federal Office staff. It will make the load considerably lighter if regular columnists can arrange to submit their copy earlier than usual to allow extra time for processing.

WICEN Divisional News

Recent developments in the National WICEN Telephone Bulletin Board Network have been reported by Leigh Baker, the Federal WICEN Co-ordinator. Leigh's report will be published in full in the August issue of the magazine, but it is worth noting that the WICEN Divisions, despite their varying status and disparate charters, are managing to reach agreement on procedures, training and administration.

Co-operation between several states has produced an almost complete national BBS which can be accessed by anyone with the available equipment. For details about access to these phone BBSs, see Leigh's report next month.

DoTC Guidelines for Pager Services

Last November it was reported in WIANEWS that the WIA had commented, at fairly short notice, on a draft DoTC Spectrum Planning Document containing guidelines for the pager service.

Earlier this year DoTC issued Spectrum Planning Document No. SP 5/91, Policy Guidelines for Assignment of Frequencies to the Paging Services. It was examined in detail by John Martin VK3ZJC, Chairman of FTAC, as well as by the two amateurs who had commented on the draft paper, Rob Milliken VK1KRM and Paul Bell VK1BX. From their comments a response was prepared and sent to DOTC expressing the WIA's concerns with some aspects of the pager service. Before detailing those concerns however it is worth going over some of the background.

From the beginning amateurs need to acknowledge a couple of points; firstly, the pager service is not operating on amateur frequencies for it is just above 148 Mhz; secondly, the equipment is designed to good commercial standards. Indeed, the WIA is of the opinion the Policy Guidelines mentioned above are generally a good set of technical specifications.

How does pager interference happen? Principally in three possible ways; firstly through an inopportune combination of frequencies, that is by intermodulation product interference. Secondly through cross modulation, that is by information from a strong unwanted signal being imposed on a weaker wanted signal. Thirdly through adjacent channel interference, that is lack of adjacent transmitter selectivity in the receiver or excessive sideband noise from the transmitter where the transmitter can be either the pager transmitter or a dirty local oscillator.

The first potential cause is not new, having been discussed in Federal Council in 1987. Indeed some repeater groups have been carrying out site intermodulation frequency checks to select suitable repeater frequencies. Incidentally "inverting" the repeater input and output frequencies is not a cure-all, as each site must be examined in detail for all frequencies in use at the specific location.

The second and third potential causes became more apparent around the time pager output powers were doubled late last year. Pager transmitters and sensitive, but wide band, amateur transceivers are not compatible. The selectivity of modern amateur VHF and UHF transceivers is not good. Indeed many boast very wide receiving ranges, which leads to minimal input tuning.

The WIA Response

The WIA's response observed the three potential sources of interference identified earlier. It commented that the amateur service was capable, with some assistance from DoTC, of conducting site intermodulation evaluations. It pointed out some repeater groups had changed the frequencies of their repeaters to avoid third and fifth order intermodulation problems even though the amateurs were established on the sites considerably earlier than the pager service. The WIA believed this was the negotiation between parties called for in the DoTC Document.

The WIA observed pager transmitter side band noise emissions were a different issue, which amateurs faced due to the pager frequencies being so close to 148 Mhz. DoTC's attention was drawn to the earlier WIA letter of last September, which identified this problem and proposed an approach using filters on pager transmitter outputs, to increase compatibility between the two services. The WIA further observed DoTC had not seen fit to include that technical approach but rather had made an implied but, unfortunately, a technically incorrect reference to it in their Guideline Document.

The WIA explained once again that once a pager transmitter has radiated a (spurious or unwanted) sideband noise signal in the upper end of the amateur band, it was highly likely it would interfere with amateur FM receivers tuned to repeaters operating just below 148 Mhz. No amount of filtering at the amateur receiver would assist, for the interference was on the amateur working frequency. Filtering, to be effective, must be at the pager transmitter output.

The WIA pointed out that, unfortunately, the unwanted pager radiation sanitises the upper portion of the amateur

band for many other possible uses; a problem which DOTC had acknowledged in their Document as also applying to the land mobile service and which was to be overcome by grouping transmitters just above the pager frequencies.

The WIA also expressed reservations about the omission of pager receiver performance parameters from the Guidelines, noting the DoTC belief that market forces were expected to regulate the industry. The WIA wished to be assured this would not lead to transmitter power creep to achieve the total system performance specification of a service area of 40 km radius of the main transmitter.

In concluding the comments on the final Document the WIA made several requests:

a. we wished to know when the Guidelines become effective and asked were all existing pager systems subject to its provisions?
b. we sought correction of the erroneous statement on filtering at the amateur receiver;
c. we sought assurance that DoTC, through its Radio Inspector service, would assist in the identification of cases of pager transmitter sideband noise interference. That assistance to be principally through the conduct of controlled tests using the Radio Inspector's filters on pager transmitter outputs; and
d. we sought re-assurance the solution of compatibility problems would be on an equitable basis, with due allowance for the earlier operation of amateur equipment from a site, when that was so.

The WIA's final observation was that the difference between devolution of a function and abrogation of a responsibility appeared rather tenuous in the Document. We believed the public must surely expect a reduction of licence fees or taxes as the EMC/RFI service rendered reduces and the public is forced to go elsewhere for that service.

What Can Amateurs Do?

With increasing co-siting the planning of amateur services has become a lot more complicated. This is a challenge repeater groups and Divisional Technical Advisory Committees or TACs have to meet. The Federal Technical Advisory Committee or FTAC can help, as can DoTC to some extent. Amateurs will also need to pay more attention to design and engineering of their repeaters. Federal Council recognised this back in 1989 and recommended all repeaters and beacons be constructed to good commercial practices and standards in order to retain claim to prime sites.

There are several methods available to control pager interference. They include:

Altering the amateur band plan to avoid the problem frequencies at the top of the 2 metre band. This has already been done on some sites. In some circumstances inverting the repeater frequencies has transferred the interference problem to mobile users of that repeater.

In the case of adjacent channel interference caused by the sidebands or sideband noise of an adjacent transmitter, inserting a notch filter on the amateur frequency in the pager transmitter path is the only solution.

If the pager interference occurs further down the 2 metre band adding filters on the wanted frequencies to improve the front end selectivity and attenuate signals in the top end of the band.

Taking a lesson from commercial operators and add subaudible tone squelch to amateur transceivers so that only signals carrying the squelch tone will open the mute.

What can the WIA Do?

As you can see from this news item, the WIA has commented twice on the DoTC Guidelines and will press to have its points accepted.

The WIA needs to inform amateurs on how susceptible their amateur transceivers are to interfering signals. This should be included in all future equipment reviews.

The WIA could also usefully advise the manufacturers representatives of the problems with their products. These problems may be unique to Australian national band planning circumstances.

Publicity needs to be given to the causes of pager interference through the columns of Amateur Radio magazine; two articles have already been supplied and a third, by an amateur who overcame pager interference, has been promised.

Simple, yet proven effective, remedies contributed by members will be published in Amateur Radio magazine.

It is also obvious the two metre band plan, now twenty years old, is badly in need of review.

Thanks

That's all the WIANEWS we have room for this month. My thanks to the President, Ron Henderson VK1RH, and to Brenda Edmonds VK3KT for their help with WIANEWS.

Bill Roper VK3ARZ
ar

A HISTORY OF RADIO IN SOUTH AUSTRALIA, 1897-1977.

John Ross. ISBN 959 5852 0 6.
Published by J F Ross, Adelaide, 1978.
Subject: History of amateur and commercial radio in SA.

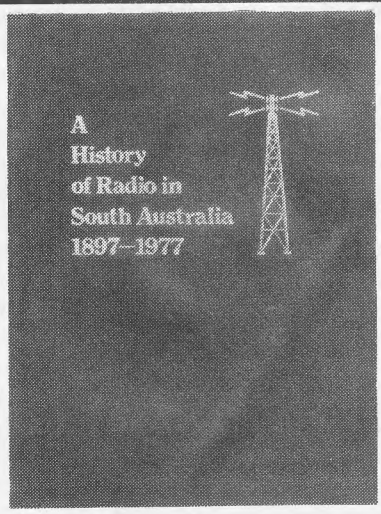

John Ross has done an excellent job of writing the history of radio in South Australia, including biographies of early SA amateurs, and his book must serve as a model for other WIA historians. In many cases, the biographies are supported by photos of the early amateur stations. It is a little sad to realise it is no longer possible to do interviews with early amateurs such as John did in 1977-78, simply because there are now so few of the old timers left. In addition to a strong amateur and WIA history, John presents extensive research into commercial broadcasting both in SA and in context with the rest of Australia. He even provides information on the electronics activities of the Weapons Research Establishment and the Ceduna Satellite earth station, and covers the SA TV stations too.

Finance for printing the book was provided by Ernsmiths, an Adelaide electrical company, which also retailed it.

It is a substantial hard-cover publication of 272 pages, larger than A5 size. I am unsure of the original cost, but it now sells for perhaps $10-$20, if you can find a copy.

Reviewed by Colin MacKinnon VK2DYM ar

Measurements on Balanced Lines Using the Noise Bridge & SWR Meter

Lloyd Butler VK5BR
18 Ottawa Ave
Panorama 5041

Introduction

I HAVE OFTEN BEEN ASKED how test instruments common to the radio shack could be used to measure the performance of balanced transmission lines. This is a good question considering that instruments such as the noise bridge and the SWR meter, in their usual form, are made for unbalanced lines with a ground common. Furthermore, the usual SWR meter is made for a balance at 50 ohms, and sometimes 75 ohms, whereas balanced lines, such as TV ribbon and open wire pairs, have a higher characteristic impedance such as 300 ohms. There seems to be little in the amateur radio handbooks addressing this problem so I decided to experiment with a few ideas aimed at using these instruments on balanced lines operating in the HF region.

Initial discussion follows around the use of special balancing circuits which connect to the usual amateur radio noise bridge. The discussion leads on to the SWR meter. In the process of experiment, I constructed a special SWR meter for balanced lines and this instrument will be described. To lead up to this subject, the operation of a typical SWR meter for unbalanced lines is discussed. Whilst there is plenty of available construction information on these instruments, basic theory is often just assumed. Most radio amateurs use these instruments, but I often wonder how many understand the significance of what they measure.

Measurements Through Balun Transformers

Measurements into balanced lines can be made through a 1:1 RF transformer with primary and secondary tightly coupled. This is easily achieved with the primary and secondary twisted together and wound on a suitable toroidal ferrite or iron dust core. The method of connection shown in figure 1A is not satisfactory for measurement purposes because there is a capacitance unbalance reflected to the secondary from the unbalanced primary. An electrostatic shield between primary and secondary would solve this problem, but be difficult to apply whilst still maintaining tight coupling.

A more satisfactory connection is shown in figure 1B in which each leg of the line is fed through one of the two windings. For the balanced load, the current Ib in each winding is equal but opposite in phase to each other, and the magnetic field is balanced out, resulting in zero inductance. For any common mode signal, the currents Icl and Ic2 through the two windings are in phase, hence the device acts as an inductive choke. Furthermore, if there is an unbalance in the load currents Ib1 and Ib2 through the windings due to an unbalance of impedance in the load to ground, the device acts as a choke to the differential value of the current (Ib1-Ib2) or (Ib2-Ib1). In effect, the transformer acts as an inductive choke to all but the balanced load current.

The Noise Bridge

The noise bridge is inherently a device for measuring the reactance and resistance of an RF load with one side grounded. The rotor of its tuning capacitor is grounded and the output to the receiver has one side grounded. I did consider the possibility of a new circuit with the whole bridge floating above ground, but this would have presented some real design problems. However, I found that quite reasonable results could be achieved by connecting the balanced load under test via the choke circuit of figure 1B and as shown in figure 2. For frequencies below 10MHz, I used 12 bifilar turns on an Amidon FT50-72 toroidal ferrite core. The method of winding does introduce some shunt capacitance across the circuit, and five turns were found to be more suitable above 10MHz to reduce error caused by this capacitance.

One problem with the common form of noise bridge is that maximum resistance measurable is limited to 250 ohms or less. The characteristic impedance of ribbon cable and open wire line is usually much higher than this. In my own home-constructed noise bridge I can switch in extra fixed resistance to allow measurement up to 800 ohms.

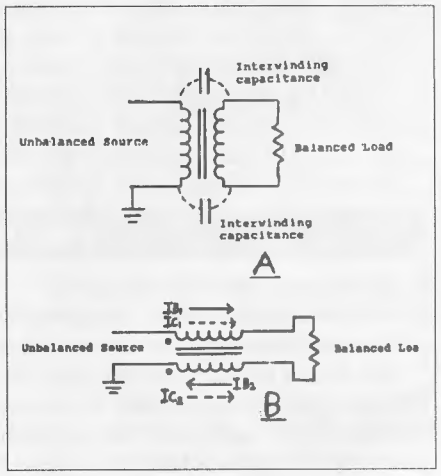

Figure 1. Two forms of 1:1 unbalanced to balanced circuit transformer.

An alternative method of measurement is to connect the balanced line via a candelabrum connected balun as shown in figure 3. Two separate transformers, each similar to that of figure 1B are used and an impedance transformation of 4 to 1 is achieved. The circuit is an extension of the figure 1B 1:1 ratio circuit with the inputs of the two transformers in parallel and the outputs in series. Resistance and reactance measurements are indicated on the bridge as a quarter of the real value. For example, 300 ohms resistance would be read as 75 ohms.

I found the two methods of measurement to be satisfactory on a transmission line provided the line was well balanced such as when terminated in a centre-fed antenna. If some degree of unbalance exists, such as when the line is matched into the end of an antenna, the measured results are in question. In this case, reversing the connecting leads to the line gives a different impedance reading. I suspect the true impedance in the balanced mode is some form of mathematical mean between the two readings, but I am not sure about this.

I found that the out-of-balance component could be essentially eliminated by using the candelabrum divide by four circuit, but further isolating its input via another balun choke of figure 1B. The complete system is shown in figure 4. Using this system, the transmission line leads could be reversed without change of reading, even if the line was a little out of balance. I recommend this as the preferred measurement system.

Concerning the toroidal transformer design, the inductive reactance of a winding should be sufficient to act as a choke at the impedance being measures (say 10 times the impedance). On the other hand, as few turns as possible should be used to minimise capacitance between the windings. To achieve high inductance with few turns, a high permeability ferrite core is desirable. The Amidon FT50-72 cores which I used have a permeability of 2000.

Before making any measurement on an actual transmission line, the circuit can be checked out using a resistor of value equal to the characteristic impedance of the line.

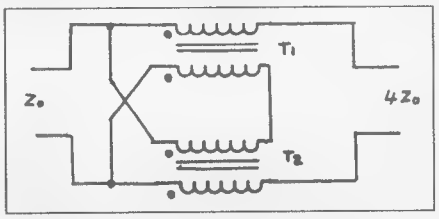

Figure 3. The Candelabrum balun arrangement provides a 4:1 impedance transformation.

This will give an indication of the accuracy of the system and whether any appreciable reactance is introduced by the balancing network. This is most important towards 30MHz where the result can be most affected by a small amount of shunt capacity and lead inductance.

The SWR Meter

Before introducing SWR measurement on balanced lines, I thought it would be helpful to first discuss the operating principle of the Standing Wave Radio (SWR) bridge. Most radio amateurs could explain that the instrument somehow measures forward wave power and reflected wave power, and that it derives a ratio between maximum and minimum of standing wave voltage or current on the transmission line. Let us examine the operation of the instrument in a little more depth.

The instrument operates by comparing two voltages. One voltage is derived from the voltage across the line and is proportional to and in phase with that voltage. The other is derived from the current through the line and is proportional to and in phase with that current. One type of instrument uses a loop run along in parallel with a length of the line to inductively couple the current component. The voltage component is capacity coupled into the loop. Most SWR meters are also calibrated in power, and this particular instrument, more often used at VHF/UHF, gives a power reading which varies with frequency. Hence it requires a power versus frequency calibration chart.

An SWR meter, which is often assembled by the home constructor, makes use of a toroidal current transformer to derive the current sourced voltage component and a resistive voltage divider for the voltage component. A typical circuit taken from *Amateur Radio,* Nov 1969 (ref 1) os shown in figure 5. Because of the methods used to couple each component, the developed voltages are constant with frequency, and a calibration chart is not required. For this particular circuit, operation to 70MHz is claimed. For further explanation of the SWR meter we will make use of this circuit.

The voltage derived from current in the line is developed across either of the two 27ohm resistors marked R. The voltage VI is calculated as follows:

$VI = I_L.R/T$

where I_L is the line current and T is the turns on the secondary of the current transformer. (Note: the primary is, in effect, one turn).

The voltage Vv developed from that across the line is equal to the voltage divider ratio formed by VR1 in parallel with R2 and connected in series with R1. The values of T, R, R1 and R2 in parallel with RV1 are carefully selected so that VI = Vv when the load resistance is equal to the nominated line impedance (50 or 75 ohms).

Two detector circuits record the summed voltage of Vv and VI. One, which we will call Forward, adds them directly. The other, which we will call Reverse, adds them, but with VI reversed in phase. We now refer to the vector diagrams figure 6. If the load is resistive and equal to line impedance, then for Forward, Vv = VI and the resultant Vr = 2Vv = 2VI (figure 6A). For Reverse, the resultant is zero (figure 6B), hence the ratio R between Reverse and Forward values of Vr is zero.

If the load resistance is not equal to Zo, as shown in figures 6C and 6D, a finite value of resultant voltage Vr is developed for Reverse, and the ratio R between Reverse

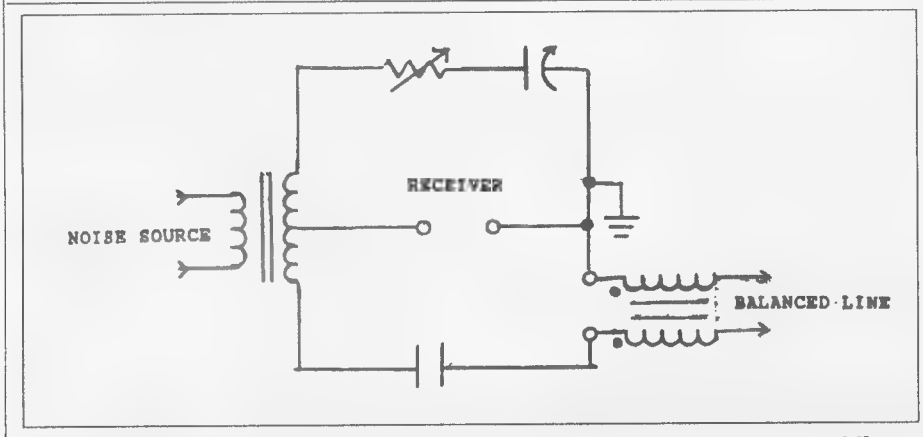

Figure 2. The noise bridge connected to read impedance of a balanced line via balun choke.

and Forward values of Vr is finite.

A third case (figures 6E and 6F) shows a load impedance equal to Zo, but reactive, hence the load current is out of phase with the load voltage. Again, a finite value of resultant voltage Vr is developed for Reverse, and the ratio R between Reverse and forward values of Vr is finite.

It can be seen that the instrument is a bridge circuit which balances when there is a resistive load equal to Zo and records by ratio R the degree by which the load deviates in impedance from that resistive value. When connected to a transmission line, ratio R also equals the ratio between the reflected wave voltage and the incident or forward wave voltage on the line. In operation, transmitted power is set (or meter sensitivity is set) so that the Forward meter reads full scale representing forward wave voltage down the line. The Reverse meter, representing reflected wave voltage, then reads the ratio R between Reverse and Forward values of Vr, hence representing the ratio between reflected and forward wave voltage. The relationship between standing wave ratio SWR and ratio R is given by the formula:

SWR = (1+R)/(1-R)

The normal practice is to calibrate the Reverse meter scale in SWR as defined by the formula. The Forward meter is calibrated in power based on E squared divided by Zo where E is the line voltage for an SWR = 1.

Most amateur radio operators of today use an SWR meter, but I venture to say they are used more to ensure that a 50ohm load is presented to their transmitter than to check SWR on their transmission line. If some form of tuning or matching device is connected between the SWR meter and the transmission, there is no relationship between what is read on the meter and what standing waves are actually on the line.

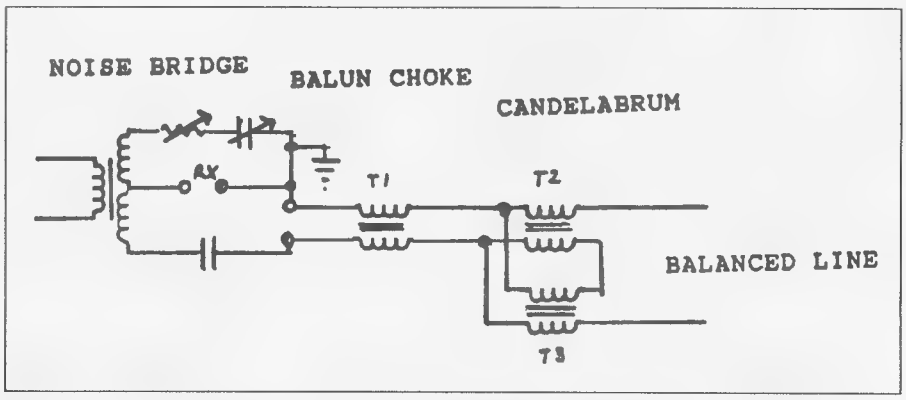

Figure 4. The improved noise bridge arrangement for measuring lines using a 1:1 balun choke driving the 1:4 candelabrum circuit.

How often do we hear on the air someone quoting his SWR = 1:1 to indicate how well his antenna system is adjusted when in fact he is really telling us how well his transmitter is loaded to its correct load impedance? In the next breath he tells us that he is using a Z match or transmatch or whatever and, in reality, has no idea of what standing waves exist on his transmission line, or what power loss they might be causing.

We can use the SWR meter to check the performance of a dummy RF load. We often see a dummy load quoted as having a standing wave ratio of some value at a given frequency. This, of course, if an anomalous declaration. The path length through the core of the dummy load can be considered as but a fraction of a wavelength, hence there are virtually no standing waves. What they really mean is that, using an SWR bridge to check deviation in impedance from the nominal value of dummy load resistance R, a given value on the SWR scale is recorded. It means the impedance load produces a SWR reading similar to a transmission line of Zo = R and operated with that SWR.

So the SWR meter is not really some device which, by some form of magic, separately plucks out the forward wave and the reflected wave to calculate SWR. It is a bridge circuit which records impedance deviation from a given nominal resistance and is calibrated in terms of transmission line SWR.

If it is not obvious, to measure SWR on the transmission line, the meter must face the line. If the line is balanced, or is a different Zo from that for which the meter is designed, some form of transformer is required. As will be discussed in later paragraphs, this addition in itself can produce some questionable readings on the meter.

Owing to loss in the transmission line, the SWR reading will always be higher at the far or antenna end of the line. It is good to check out the far end, but somewhat difficult if located high out in space. If the line is balanced, a balanced SWR meter would seem to be the order of the day. As you will see in the following paragraphs, I have made an effort to design one. I must admit that, up to now, I have stayed at ground level and have not attempted to use it aloft.

Concerning figure 5, I built a unit based on this type of circuit some years ago. For the record, I added a small capacitor across R2 to make the unit balance properly at the upper end of the HF band. This seemed to be necessary to correct for a few picofarads

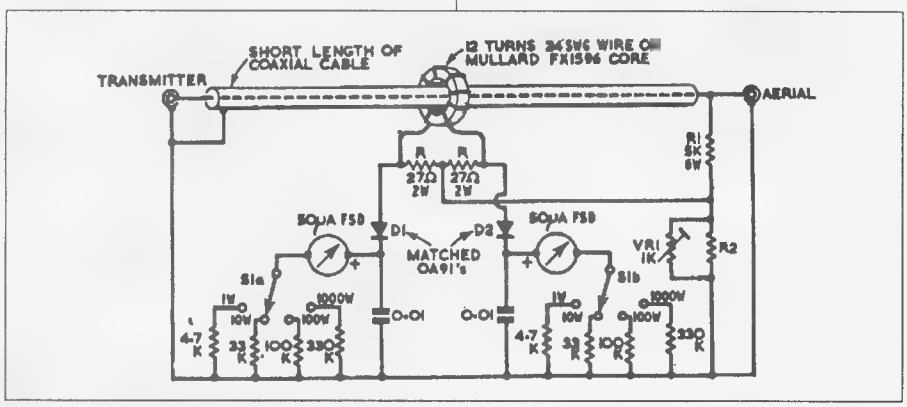

Figure 5. Typical SWR/Power meter for HF frequencies (from *Amateur Radio*, November 1969). The sensitivity ranges given in S1a and S1b are double the correct figure. Those in the caption are correct. Circuit of the basic Frequency-Independent Directional Wattmeter, with four ranges corresponding to full scale deflections of 0.5, 5, 50 and 500 watts in 50ohm lines, when the value of R2 (including VR1, if fitted) should be 220 ohms. For 75ohm systems R2 equals 150 ohms, and the calibration is different. The coaxial cable acts as an electrostatic screen between its centre conductor and the secondary winding of the toroidal transformer; the cable length is unimportant.

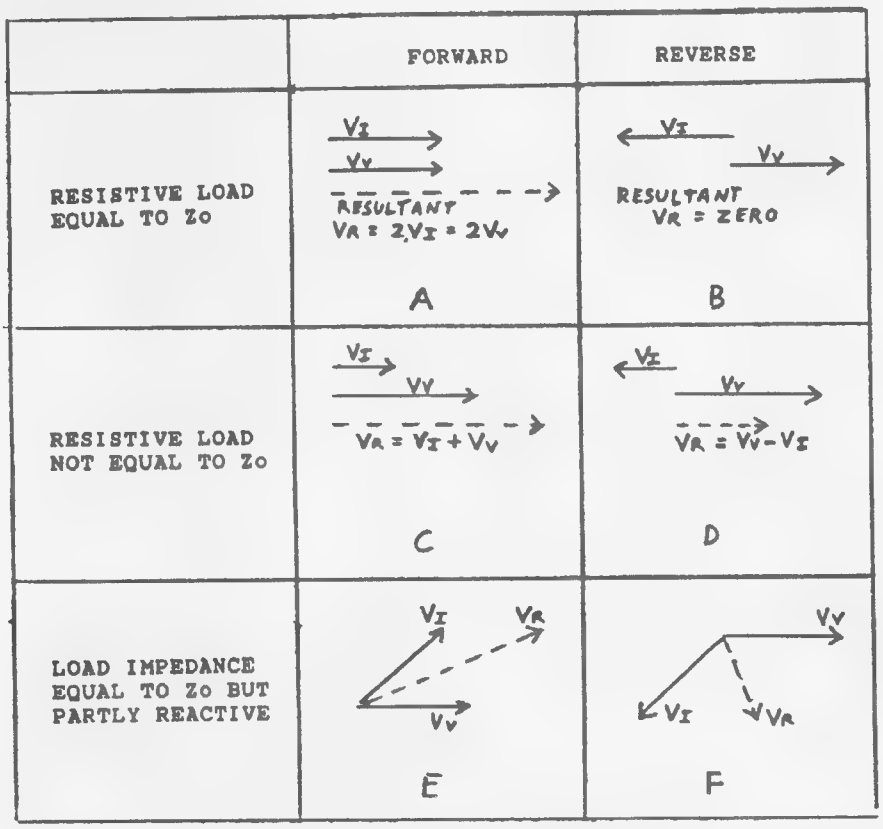

Figure 6. Vector diagrams for the SWR meter (see text).

of stray capacity in parallel with R1. This might be a useful tip for someone else building such a unit.

An SWR Meter for Balanced Lines

As part of the balanced line exercise, I set out to build an SWR meter for balanced lines. It seemed a simple matter to base the design on the circuit of figure 5, but with a toroidal current transformer in each leg and a balanced voltage sensing circuit. The outer cover and braid were stripped off some coax cable leaving the centre conductor insulated by the coax dielectric. A length of this was slipped through each toroidal core to form the two legs of the metered transmission line. A short length of braid was ultimately put back over the dielectric where it went through the toroidal core to form an electrostatic shield. I found this was necessary to correct a balance error caused by capacitance coupling into the winding around the core. (Of course, the unbalanced versions such as figure 5 all used the braid shield, so this was not unexpected).

The circuit of the balanced meter is shown in figure 7. The circuit constants have been worked out for a balance with 300ohms resistance, which suits common forms of TV ribbon and open wire line. The secondaries of the two 12:1 current transformers (T2, T3) are connected in series. (They also work quite well when connected in parallel). The voltage divider network (R10 in series with R6//R7 and R8//R9) is coupled into the signal combining and detector/metering circuit via transformer T4.

It all seemed straightforward, but I experienced a lot of trouble with circuit balance and common mode currents. I found it necessary to isolate the transmitter source with balun choke T1 to improve the balance at the instrument input. (I should point out that the source was already fed via a standard 4:1 transmitting balun). For T1, a 30mm diameter ferrite core was used to accommodate the transmitter power. This was a high permeability Philips type which I happened to have on hand.

A problem of line balance on some lines showed up as a different SWR value when the line pair legs were reversed. (This was a similar problem to that experienced when using the noise bridge). The problem was compounded by unbalance in the source circuit and hence the reason for the input choke.

Isolating transformer T4 plays an important part in minimising the effects discussed. A conventional transformer connection as in figure 1A seemed more effective for this particular circuit than the choke connection figure 1B.

I tried all sorts of balancing arrangements, but finished with the circuit as shown. The measures taken did not completely eliminate response to out-of-balance signal, but the level of this response was reduced enough to be tolerated.

Other Impedances

The balanced SWR meter is designed for a balance at Zo = 300 ohms, but other impedances could be used by changing the value of resistor R10. The value of R10 is inversely proportional to Zo. For example, for Zo = 600 ohms, halve the value of R10. I haven't tried any other impedances, but that is how it can be worked out. For correct power calibration, the meter resistors must also be changed. These are changed in inverse proportion to the square root of the impedance change. For Zo = 600 ohms,

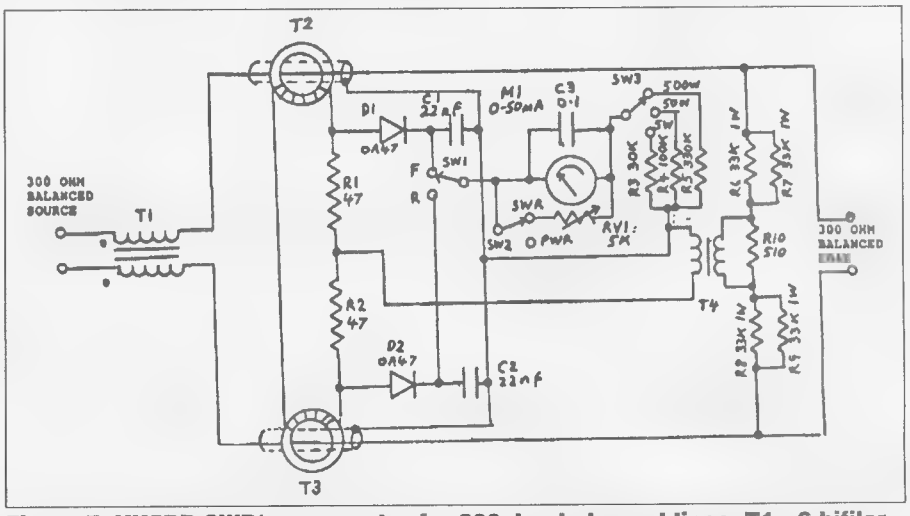

Figure 7. VK5BR SWR/power meter for 300ohm balanced lines. T1 - 6 bifilar turns on Philips TDK2609 30mm diameter toroidal core μ = 800. T2, T3 - 10 turns on Amidon FT50-72 toroidal core μ = 2000. T4 - 10 bifilar turns on Amidon FT50-72 toroidal core.

divide the meter resistors by root 2.

Checking the Balance

High power 300ohm non-inductive loads are not easily obtained, but the balance is easily checked by using low transmitter power and loading the SWR meter with a few one or two watt resistors to make up 300 ohms. Five watts on the lowest power select meter position gives full-scale forward reading, and this is applied for just long enough to carry out the test without burning out the resistors. When the meter is selected for reverse or reflected power, the 300ohm load should give a low meter reading (near 1:1 SWR) at all HF frequencies.

Meter Calibration

The following can be used to calibrate the meter scale:

SWR	mA	Power	mA
1	0	0	0
1.5	10	2	10
2	17	5	16
3	25	10	22
5	33	20	32
7	38	30	39
20	46	50	50
INF	50		

75 Ohm SWR Meter with Candelabrum Balun

Although 50 ohms is the most common operating impedance for SWR meters, many have a switch to select either 50 or 75 ohms. The type of meter which uses resistive voltage division (as in figure 5) can also be easily converted to 75 ohms by shunting the lower resistance arm of the voltage divider.

Another method I used for checking SWR on a 300ohm line was to couple a 75ohm SWR meter into the line via a 4:1 candelabrum balun pair as shown in figure 8. The toroidal cores of the balun pair needed to be large enough to handle the full RF power which passes through their windings. I used Amidon FC500 FT114 ferrite cores which are 29mm in diameter. The windings were bifilar wound with 19 turns on each, which gave a calculated inductance of 29 microhenries. This seemed to be a good compromise between sufficient reactance over most of the HF band without too much capacitance.

I found this measuring system worked like a charm. None of the problems I experienced with my balanced SWR meter (figure 7) was apparent, and the transmission line legs could be transposed at will. This seemed to be the best system of measurement, its only limitation being it could be used only at the transmitter end of the line. For measurements at the load or antenna end, the balanced meter would have to be used.

I did try adding a further 1:1 balun choke at the candelabrum input as I had found to be necessary with the noise bridge. However, this did not enhance the performance in any way and, in fact, tended to modify the impedance reflected at the highest frequencies.

One might well ask how the normally used 4:1 impedance ratio balun connection (figure 9) performs as compared with the candelabrum circuit. This connection is a type of auto transformer and probably does little to reject common mode signals. Anyway, when using this type of transformer, I again experienced the problems of a different answer when the line leg pairs were reversed.

The balun transformer used for figure 9 type balun was the one that can be bought as a 1kW kit with a Amidon T200 iron powder core. Fourteen bifilar turns were placed on the core. When terminated in a 300ohm resistance, this balun reflected a considerable reactive component at the lower HF frequencies. (This was verified with the noise bridge). Using the 75ohm SWR meter, the SWR at 21 and 28MHz was 1.2:1, but increased to 1.8:1 at 7MHz, and 2.8:1 at 3.5MHz. This compared poorly with my candelabrum circuit, which gave a reading with 1.1: over the whole range of 3.5-28MHz.

Now this is an interesting result. Suppose you use this typical broadband balun at, say, 3.5MHz to couple to a transmission line and then adjust your matching at the antenna end by stub or whatever. You adjust for a 1:1 SWR on the meter, but actually achieve a mismatch and standing waves on the line. Of course, the core needs more turns for the lower frequencies. Some time ago I did some tests with this core using the 1:1 ratio winding connection and a 50ohm load. I came to the conclusion that, for better performance, the number of turns should be increased to around 20 for frequencies below 5MHz and reduced to around six turns for frequencies above 10MHz. Anyway, there is a message here. Do not take your balun transformer for granted. Check it out at the frequency of operation using the SWR meter and with its secondary terminated in a dummy resistance equal to working load impedance. Fortunately, even if mismatched, line losses at the lower HF frequencies are small, hence we are usually able to tolerate the effect I have discussed without recourse to rewinding the transformer.

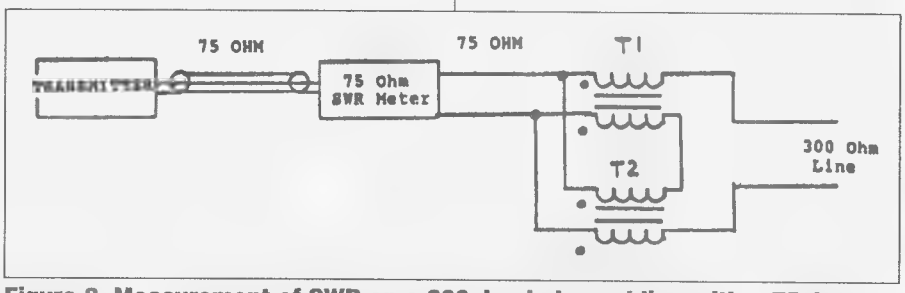

Figure 8. Measurement of SWR on a 300ohm balanced line with a 75ohm SWR meter and candelabrum circuit. T1, T2 - 19 bifilar turns on Amidon FC500 29mm ferrite core, μ = 125.

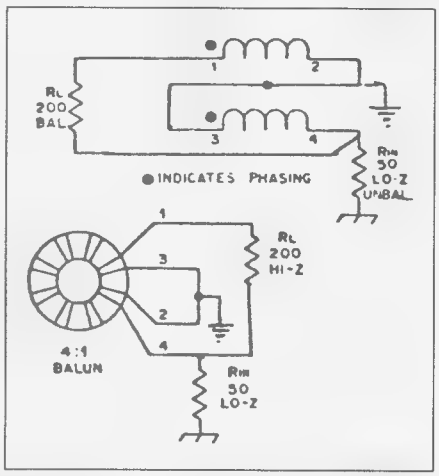

Figure 9. The usual 1:4 balun circuit - poor common mode rejection.

Summary

Based on much of my own experimentation, I have described how common instruments in the radio shack can be used to make impedance and SWR measurements on balanced transmission lines. Measurement methods involve the use of particular types of balancing circuits which work in conjunction with the noise bridge and the SWR meter. A specific SWR meter for 300ohm balanced lines is also described. Included in the discussion is a description of how an SWR meter works, and some

comments on how it is generally used in the radio shack.

I think there is material in this article to invite further discussion on the measurement of balanced lines and the use of the two instruments put to use. Perhaps some of our readers have some other ideas which I hope they can test out before going to print. It is one thing to put up a theory, but I found this particular project (simple as it may seem) was one with plenty of those hidden little difficulties.

References

1. P G Martin G3PDM - Frequency Independent Directional Wattmeter and SWR Meter - Amateur Radio, November 1969.

2. Lloyd Butler VK5BR - The Merits of Open Wire Lines - Amateur Radio, Sept 1991.

3. Lloyd Butler VK5BR - Transmission Lines - Measurements of their Characteristics - Amateur Radio, October 1989.

ELECTRONIC WORLD DISPOSALS

NOW OPEN

For that hard to get or unusual item, give us a call. Big range of goods and components in stock.

We are interested in purchasing surplus and disposal components.

27 The Mall,
cnr Eastfield and Bayswater Rds
South Croydon Vic 3136

Ph: (03) 723 2699

Remember to leave a three-second break between overs when using a repeater

Pager Interference

Part I

Ron Henderson VK1RH
171 Kingsford Smith Dr
Melba 2615

Lately, a number of amateurs have been suffering pager interference, that is the presence of short burst like data signals in their 2m transceivers. For those who live near pager transmitters in busy cities, the bursts are almost continuous and most annoying as they break the mute.

WHAT IS CAUSING THIS interference, you might ask. What is the WIA doing about it and, even more importantly, what can the individual do to reduce its effects.

Pagers are a system of relatively high power transmitters, operating on 25kHz channel spacings from 148.0125MHz upwards. Yes, they are just above the amateur 2m band. Their purpose is to send a coded data burst transmission to a small pocket size receiver carried by a subscriber client, usually to give them a message. The pager system has a service area of 40km radius from the main transmitter and may have supplementary transmitters on the same frequency for gap-filling purposes.

From the beginning we should establish a couple of points; firstly, the service is not operating on amateur frequencies; secondly, the equipment is designed to good commercial standards. Pagers are regulated by the recently issued DoTC Policy Guidelines for Assignment of Frequencies to the Paging Services, Spectrum Planning Document No SP5/91. The WIA commented on the first draft of that document and has sent further comments on the recent issue.

How does pager interference happen? Principally in three ways, through an inopportune combination of frequencies (intermodulation product interference), cross modulation (information from a strong unwanted signal imposed on a weaker wanted signal) or through adjacent channel interference (lack of adjacent transmitter selectivity in the receiver or excessive sideband noise from the transmitter (this transmitter can be either the pager transmitter or a dirty local oscillator)).

This article will look at the first cause, with later articles examining the second and third and providing a case study by an amateur operator who has controlled his pager interference and resumed weak signal operating.

Intermodulation occurs when two signals are present in a non-linear device. Figure 1 shows diagrammatically the basis of intermodulation. RF signals at a site and its vicinity out to several hundred metres may intermodulate or mix due to any non-linearity at the site. We have all heard about 'rusty bolts', but there are wideband masthead preamps, class C output devices and numerous other potential mixers; these include the preamplifier of your amateur transceiver, a slightly dirty antenna joint or a faintly dry joint in the receive path in the receiver.

An illustrative, but real-life, case study occurred at Mt Ginini in VK1. The amateur repeater VK1RGI is input 146.350MHz/output 146.950MHz and local packet enthusiasts wanted to put a 147.575MHz digipeater on the same site.

When calculating intermodulations there are two principal ones that need evaluating, these are:

third order, that is if $2 \times f1 \pm f2 = f3$ there

are problems

and fifth order, if 3 X f1 ± 2 X f2 = f3 there are problems.

These are two station intermodulation products; three station intermodulation products are not at all uncommon. Bear in mind that the third 'station' could well be a spurious emission from your local oscillator.

For Mt Ginini the two station third order solution is:

2 X 146.950 - 147.575 = 146.325

but f3 is 146.350, so allowing for FM signal deviation which, incidentally is doubled, brings the intermodulation product into the receiver input. Consequently it was not possible to use that packet frequency, and the one selected was 144.800MHz. I will leave you to do the sums to show it was acceptable.

In calculating the intermodulation products it is necessary to try each site frequency in each position in the equation as f1, f2 and f3. On a busy site this is a mammoth task, but solvable by computer provided you know all the frequencies in use in the vicinity. At Mt Gray, near Goulburn, the number of transmitters on the site produced a 36-page print-out with 70 lines per page of the potential intermodulation products applicable to the siting of the 2m repeater at that location. Of all the repeater frequencies available only **one** would work on the site. In view of our earlier comments regarding the cleanliness of our own local oscillator this has real impact.

Okay, you say, that is nothing new; we have all observed birdies in our receivers. Indeed, years ago, when VHF converters were the go, birdies were used for calibration and checking sensitivity. So what has changed? Only the density of signals through increased utilisation of the spectrum.

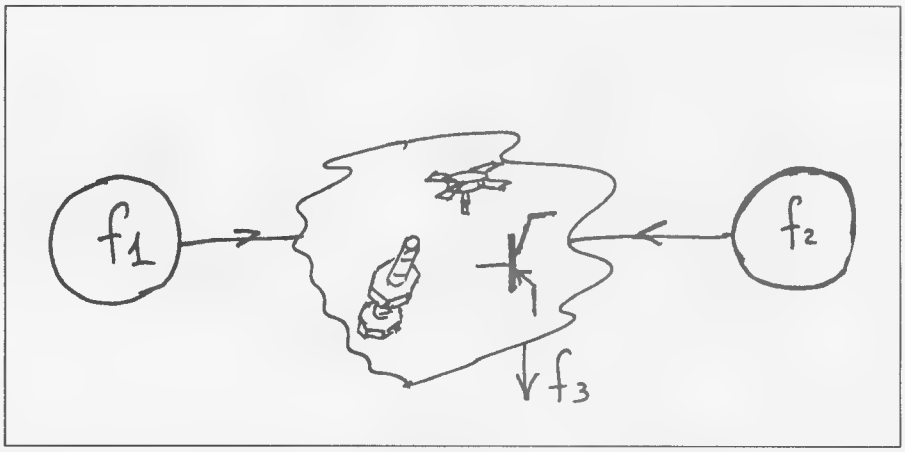

Figure 1

After all, we amateurs frequently use the statement 'amateur frequencies, use them or lose them', and now other people are using them more intensely too.

Incidentally, a consequence of site intermodulations is we amateurs need to check carefully before setting up any new service. The approach of inverting the repeater inputs and outputs is not a universal solution, by any means; indeed, it may just be the wrong thing to do in some cases.

Bottom line. With increasing co-siting, the planning of amateur services has become a lot more complicated. This is a challenge Divisional Technical Advisory Committees or TACs have to meet. The Federal Technical Advisory Committee or FTAC can help, but FTAC is essentially one man, its chairman John Martin, working with support from specialists and TACs, so much of the groundwork must be done in the states. Can DoTC help? Yes, to some extent. But again the government's 'user pays' policy impinges. Therefore, amateurs need to pay more attention to the design and engineering of their repeaters. The intermodulation theory shown above also applies in our own transceivers. Consider a receiver fed with a strong pager signal. The first amplifier could be forced to operate in a non-linear manner, that is the strong pager signal at the aerial becomes the local oscillator (LO) for a wanted weak signal. Then, if that LO has spurious components - and few signals are spectrally pure - noise or unwanted products will be passed to the IF stages and detected. Balanced mixers can help reduce this problem to some extent.

Next article, transmitter sideband noise emissions. What are they and what can we do about them? **ar**

JENLEX FILTERS

Get Rid of Pager Interference

The range of JENLEX 50 Ohm helical filters is designed to reduce or eliminate pager interference on the 2m band. They are compact weatherproof filters suitable for indoor or outdoor use.

All prices are ex-works, including sales tax, and subject to change without notice. Packaging and post are $10 on all units.

- HNF1: is a 2-stage filter rated at 100 watts, with a notch depth of better than -40dB at 148.6MHz and an insertion loss of 1.7dB at 147.600MHz *Price: $175*
- HNF2: is a 4-stage filter rated at 50 watts, with a with notch depth of better than -40d at 148.6MHz. Maximum width depth of notch is – 80dB with a narrow band width. *Price: $175*
- HNF3: is a 3-stage filter rated at 50 watts. Maximum depth of notch is -55dB with narrow band width. *Price: $165*
- HNF4: is a 2-stage filter rated at 10 watts with an attenuation better than 30dB at 148.600 Mhz and an insertion loss better than -2dB at 147.600MHz. BNC connectors are standard for this model, small enough to be used on a hand held. *Price: $150*

Notch frequency and depth can be adjusted at the factory at the time or order to suit the user's local needs.
Send for an illustrated leaflet and detailed performance curves.

122 Wanda Street, Mulgrave, Victoria 3170 Phone: (03) 548 2594. Fax: (03) 547 8545

Telecom Pagers Cause Much Anguish for 2m Operators

Rodney Champness VK3UG
17 Helms Crt,
Benalla 3672

In town and suburban areas there would be few amateur operators on the 2m band, mostly towards the 147-148MHz end of the band, who have not experienced some trouble from the operation of Telecom and other pager transmitters in the 148-150MHz band. The ones up towards the top end near 150MHz do not cause as much in the way of problems as do the Telecom pagers just above 148MHz.

NOW WE ALL KNOW THE fault is with the pager transmitters, don't we? Do you remember the TV viewers who knocked on your door and accused you of causing interference to their TV sets? Many blamed your transmissions, even though you knew your transmissions were clean. And so with the pagers; their transmission is clean too, except when a fault develops, which is relatively rare. What did you tell the TV viewer to do about his TV signals? You probably told them they needed to overcome the inadequacies of their TV system. In other words, fit a filter etc. And so it is in this case. Your amateur 2m receiver is unable to discriminate between the powerful pager transmitter nearby and the weaker signal you are trying to receive.

Erroneously, many amateurs believe their black box transceiver receiver is the best receiver made since sliced bread. Sorry to tell you, but amateur-grade equipment is not in the same league as professional equipment. It may be quite sensitive and hear quite weak signals when no other signals of any great strength are around, but in this real world there are many relatively high-power transmitters in the near neighbourhood. Most amateur receivers suffer from intermodulation, de-sensitisation, spurious responses, image response and a variety of other inadequacies. This does not mean your beaut piece of equipment is a heap of junk - although some come close! - but that you cannot expect professional performance at the price we are prepared to pay. We have to be satisfied with the amateur-grade equipment and look at ways of overcoming its inadequacies.

The pagers are not causing interference; they are not being discriminated against by our equipment. The pagers do put out quite a high ERP, usually 500 watts effective isotropic radiated power, usually up at about 30 metres or so with very good take-off. They usually use a 100W transmitter feeding four half-wave folded dipoles. Is this power as much as many amateurs use? I have run up to 1500W ERP, and some use much more. The high ERP is achieved by running as much power as allowed, plus the multiplying factor of the antenna gain.

In general, the problem caused by high-power pagers can be overcome by using notch filters to reduce the level of the pager signals at the receiver input whilst attenuating the wanted signal only slightly.

I had the opportunity of testing a filter that does reduce the level of pager transmitter signals to the front end of 2m receivers. The filter I tested over a period of several weeks is a four-pole helical resonator filter. There are many pagers in the frequency range 148-150MHz, so there is no point in having individual notch filters for each frequency. It is not practical, too lossy and too

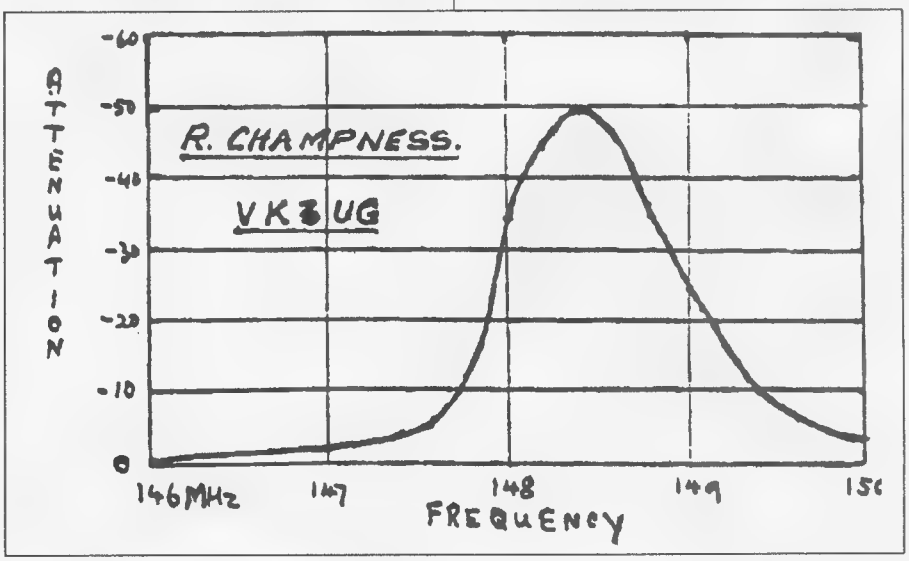

expensive. I re-tuned the filter with a spectrum analyser and tracking generator and, with careful alignment, obtained 35dB attenuation at 148MHz, raising to 50dB at 148.4MHz, with a passband insertion loss of 2dB at 147MHz and 1dB at 146MHz. These are very credible figures. Lex Paterson tells me he can achieve 62dB or better depth with this four-stage filter.

I live about 1.5km from a Telecom pager that transmits on 148.0125 and 148.0375MHz, and the signal is so strong that I notice de-sensing on all the FM repeaters. I do not have other troubles that some may have.Fitting the filters in the antenna line to the transceiver produced extremely pleasing results. No de-sensing of my receiver and minimal attenuation of the wanted signals. I have tried three receivers, and the results with the filter have been most pleasing. None of the receivers I have used has shown great distress even without the filter, but does not become desensed at all with the filter.

Yes, you could make one of these devices yourself, but the experience of the manufacturer and his use of a spectrum analyser to align the device make it unattractive to do so. The filter is made by JENLEX (Lex Paterson) of 122 Wanda St, Mulgrave, Victoria 3170. The filter sells for $175 and, at that price, is good value. Lex also offers a service where he will align the filter for the purchaser's particular needs at the time of purchase. Lex has supplied a range of filters that can be obtained, on loan, from the Victorian Division to assist amateurs with interference problems.

ar

Coastwatchers Reunion

Fiftieth anniversary national reunion of 'M' special units, Allied Intelligence Bureau will be held at Gosford on 14, 15, 16 August. Intending participants should contact Mrs Jo Foster, 38 Fitzroy St, Umina 2257. Phone (043) 41 9205 for event booking details.

2m Cavity Preamplifier

Mal Le Maistre VK3KSA
2 Thornton Crt
Mooroolbark 3138

Over the years I have seen a few pre-amplifier designs published in *AR* from a variety of sources. However, many amateurs have the wrong idea of what a pre-amplifier is for.

THE FIRST STAGE IN A receiver normally sets the noise level which is added to the ambient noise level that is amplified along with the wanted signal. The ideal would be to build an amplifier that contributes no noise at all and only amplifies the incoming signals - linearly. Unfortunately, this sort of performance is well beyond the average amateur 2m receiver/transceiver. It has to operate over about 4MHz and can have relatively poor front-end selectivity, resulting in non-linearity and cross-modulation between nearby high power signals such as TV or paging transmitters.

After many experiments with both homebrew and commercial pre-amplifiers using FETs and GaAsFETs, I found that most amplified everything and were generally more of a hindrance than a help. Reading *CQ* and *VHF Communication* magazines about cavities versus noise, both wide and narrow band, I started to experiment

CAVITY

63.5mm (2½") in diameter
105mm (4⅛") in height
0.8mm (1/32") brass wall
Tap 'A' 12mm (13/32") to Base
Tap 'B' 36.5mm (1 7/16") to base
4.8mm (3/16") brass tube
1.6mm (1/16") brass rod

Drill 3.2mm (1/8") hole at 'C' to clear 1mm silver plated wire.

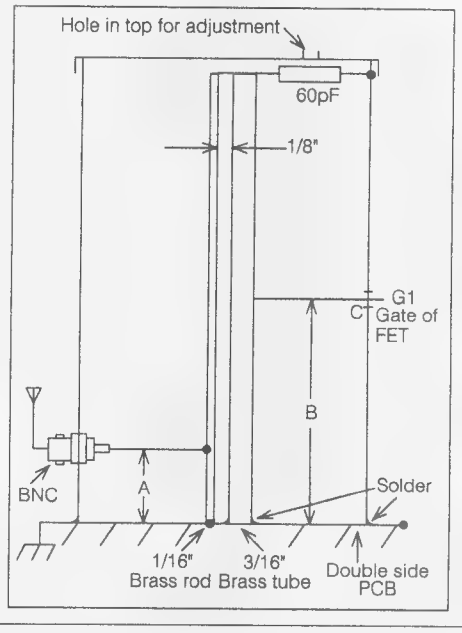

Figure 1

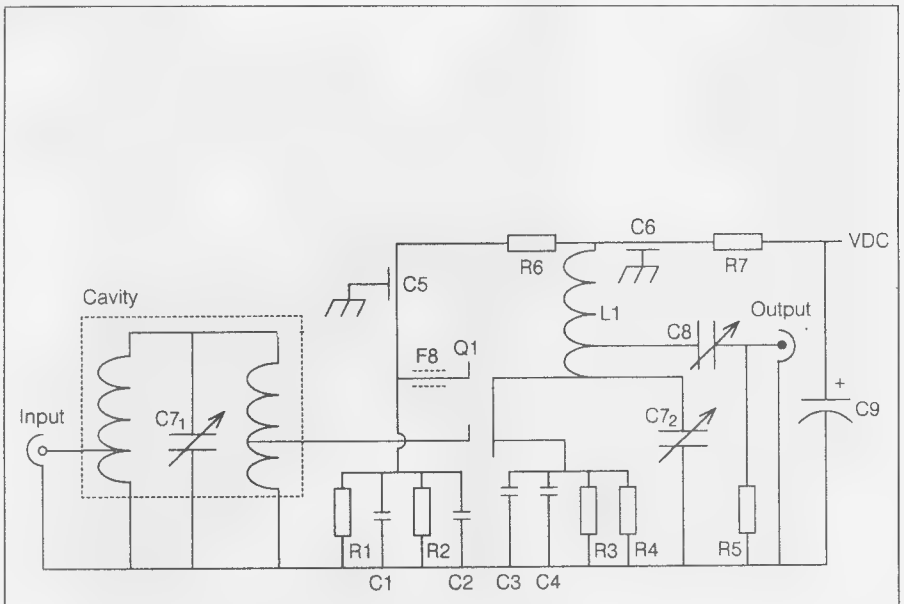

C1 .01µF monolithic
C2 .001µF monolithic
C3 .047µF green cap
C4 .01µF monolithic
C5 & C6 1000pF feed-through
C7₁ & C7₂ 0-65pF trimmer
C8 1-7pF trimmer
C9 33µF tantalum

R1 20k trimmer
R2 100k ohm 1/4 watt
R3 82 ohm 1/4watt
R4 68 ohms 1/4 watt
R5 10 ohms 1/4 watt
R6 100k ohms 1/4 watt
R7 39 ohms 1/2 watt

Q1 any suitable dual gate MOSFET
'F8' means FB-ferrite bead)

L1 4-3/4 turns 16 B&S silver coated wire tapped 3/4 of first turn from cold end. ID 11mm (7/16") length 19mm (3/4") inch.

Figure 2 Cavity with pre-amplifier circuit

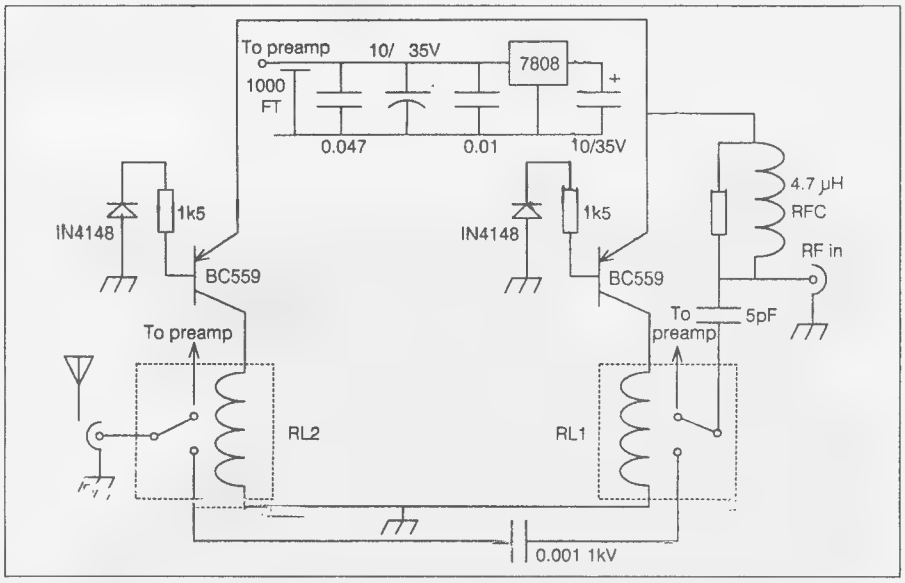

Figure 3

This VOX circuit applies if 12 volts is placed on the RF line eg Icom pre-amp switches inbuilt in the transceivers.

with various cavities and helical resonators, and they worked! However, they were much too big, being 21inches/53cm long. After numerous experiments with various configurations, I found a smaller cavity could do the same job, being just some 4-1/8 inches long and 2-1/2 inches in diameter (105mm H/63.5mm D) The inductor in the centre was also critical in relation to the frequency and Q. By altering the inductor it was possible to change the bandwidth and/or alter the side lobe performance. The insertion loss was less than 1dB and the rejection of off frequency interfering signals was about 40dB (goodbye to pagers - at least to a more tolerable level). By placing a preamp immediately after the cavity, the insertion loss was more than compensated for. This unit, combined with a suitable VOX circuit, has proved to be a very valuable experiment which sits proudly amongst my other homebrew equipment.

Construction

The cavity is a cylindrical brass tube, 2.5 inches (63.5mm) in diameter and 4.125 inches (105mm) high. The cylinder is soldered to double sided PCB material, along with the 3/16inch tube and the 1/16inch brass rod. These are soldered 1/8inch apart to the PCB, in the centre of the cylinder. A removable top is made, with an adjustment hold for the trimmer. For the dedicated,

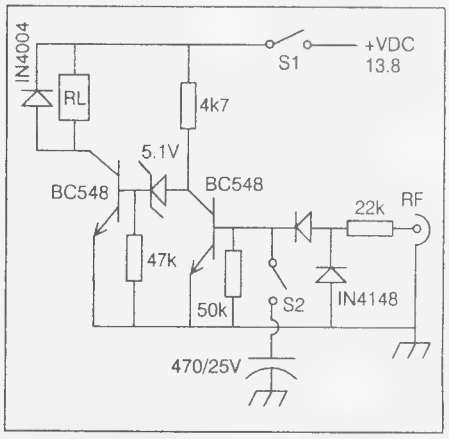

Figure 4
VOX circuit for 12v external. When RF is applied, the relay de-energises. S_1 is for power and S_2 enables 'hang time' (ie delay) for 55B.

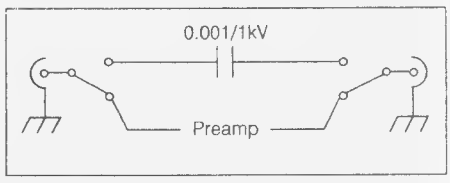

Figure 5
Switching of relay contacts in figure 4. Double pole relay can be used.

silver plating of the internal surfaces is great, for the hobbyist, leave it. Figure 1 shows the general construction of the cavity.

Designing the Cavity

After many ideas and experiments of forming the actual cavity I found the most practical way was to select a piece of brass sheet and wrap it around an aluminium drink can, holding into place by wrapping fuse wire around the newly formed brass, thus holding its present position whilst soldering the overlap flange. A good idea is not to use brass, which is too thick. I suggest 0.5mm. This gives a little bit of flexibility and allows easier soldering. Do not solder the inside overlap unless you are silver coating. All brass used in this homebrew exercise is available at most railway hobby places.

When the cylinder has cooled, remove the can and the fuse wire, place the brass cylinder on a piece of double-sided PCB (138x70mm) at one end, and draw a pencil mark around the cylinder on the PCB. Remove the cylinder, exposing the circle and define its centre with a small indentation. Place the cylinder back within the marked circumference on the PCB, then solder the outer edge or perimeter that contacts the PCB all the way around. Measure and mark a point some 26mm from the PCB up the wall of the cylinder, on the LHS, that is to say, at the end close to the edge of the PCB. For argument's sake we will call this point 'A' (shown at dimension 'A' figure 1).

Now, on the opposite side of the cylinder, mark the wall at some 46mm from the PCB. That is, point 'B' (shown at dimension 'b' figure 1). At point A mount a BNC low-cost female panel mount connection, and at point B drill a hole 4mm in diameter.

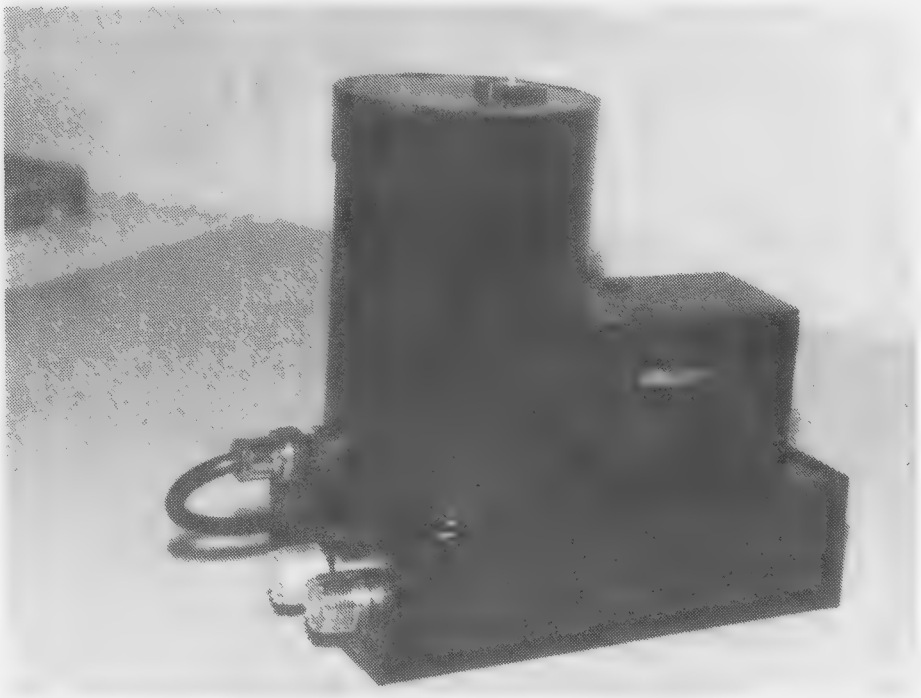

The apparatus fully assembled.

Obtain a piece of brass tube 3/16" (4.8mm) x 3 7/8"(98mm) in length, and solder it to the centre of the cylinder on the PCB (where you indented the PCB). Select a piece of 1/16" brass rod the same length of 3 7/8" (98mm) and place it 1/8" (3mm) beside the centre rod, opposite the BNC connector. Solder it home to the PCB. Now bridge the BNC to the thinner tube. Solder a piece of 1mm silver-plated wire to the centre tube opposite hole 'B', allowing the wire to extend through 'B' for 4mm. Make sure it doesn't touch the sides of the cylinder. This works as a feed-through. Lastly, place a 5-55 picofarad variable capacitor from the outer wall to the top of both tubes.

To finish off the cavity, a top cover can be made. Remember to have a hole in it to adjust the cap. Do not allow the cover to short out the capacitor, or tubes to the wall of the cavity. Point 'B' goes to the preamplifier gate 1 of the FET employed.

Figure 2 shows the circuit of the preamplifier.

It is a good idea to mount all the components in the preamp in the air, each supporting the other. This results in less loss and helps impedance-wise.

The additional circuits are typical VOX circuits that can be used to switch the cavity and preamp out of circuit on transmit. If you have any problems and require help, please call me QTHR.

Agent for Ucando
ELECTRONICS TRAINING VIDEOS

Agent required to sell UCANDO Electronics and Training Videos as sold by *Everyday Electronics* magazine

Electronics Assembly Co
PO Box 21191
CHRISTCHURCH
(4/54 Rolleston Ave)
NEW ZEALAND
Phone/Fax 3-795-570

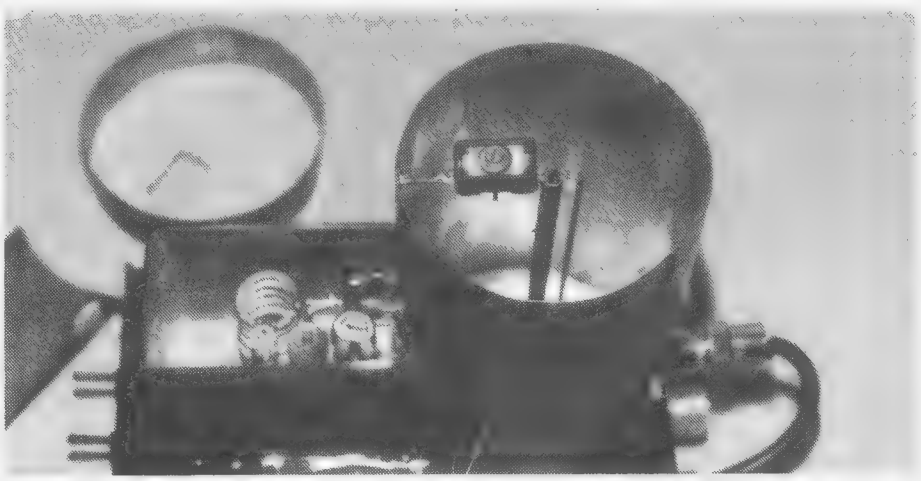

Internal view of the cavity and pre-amp.

14.116 The Australian Travellers' Net

A Diode- and Formula-Free aspect of Amateur Radio

Compiled from many peoples' memories by VK2DZL Fred Greening, 51 Murray Street St Marys 2760

It was in 1969 when VK6KC Keith Williams was employed at the Japanese Cultured Pearl Farm at Kuri Bay, that a lonely seed was sown in this most unlikely spot. Fortunately it germinated and took root and has grown to what we now call The Australian Travellers' Net".

AT THIS TIME KEITH WAS THE resident radio officer, weather observer, first-aid officer, company clerk, film projectionist and did any other job that nobody else could handle. I think that this type of employment is nowadays referred to as 'multi- skilling' but no one told Keith about this back in 1969.

Then as now, Kuri Bay was a very isolated place, being 350 km north-east of Broome and 380km west of Wyndham, and was well off the (then) little-used 'tourist track'. As the only European on the site, Keith was isolated both culturally and geographically from his peers. He then, as many other amateurs have done in similar circumstances, turned to his radio for interest and information and also to maintain some social contact with the outside world.

His gear at this time was a Geloso AM TX and a National HRO RX but this RX was later superseded by a matching Geloso RX.

Initially DX was the main interest, for conditions were particularly favourable at this time but later, as they deteriorated, he found that he was working more and more amateurs marine mobile and a few land mobile. He made contacts with the few land mobiles who were about, came to know them, and they started to meet on a regular basis.

Keith selected the frequency of 14.106 as a meeting place for no other reason than at this time of day it was generally pretty quiet. The time of 0300 GMT, as it was then, was selected as travellers, depending on what part of the continent they were on, would most likely then be stopped for either morning tea or lunch. It also suited him, for at this time of day he was usually pretty free to play amateur radio.

This arrangement brought together a small band of people of like interest, giving Keith the social contact he sought as well as adding another interest to those amateurs who were on the move, by working this amateur in such an unusual place.

These new contacts were soon picked up and monitored by more and more 'stuck at home' pairs of ears which, in effect, were experiencing something of the nature of outback Australia and the magic of faraway places ... and so came into being the nucleus of today's net.

With the passage of time base stations became involved with the sessions, and relayed back and forth between Keith and any weakly heard stations, and from this it was not too long before Keith had these stations assisting as control stations to call and pick up stations that Keith could not read himself. The net could now legitimately call itself a net, so Doug VK3YK gave it the name "The VK6KC Travellers Net". Later VK6ART Arthur became very involved with the net and helped Keith very much in developing a basic format for running the sessions. These early procedures became the blueprint from which the current operating procedures were developed.

In the fullness of time Keith left his employers and retired to Perth and it was only then he realised just how busy one can become in retirement. It was not long after this that he asked Arthur VK6ART if he would assume control of the net, as Arthur had much superior gear and an antenna system ideally suited for handling widely separated stations. Arthur accepted the post and handled it with distinction for the best part of 10 years. We all owe Keith a debt of gratitude for his initiative in starting the net, and also to all those other stations who helped in the early days and whose names are now lost in the mists of time. A big 'thank you' to all concerned.

When Arthur assumed control of the net he quickly found solid support from Reg VK6YE and later Roy VK6BO. The somewhat informal procedures soon had to be streamlined to meet the rapidly increasing demands being placed on the net by the growing band of amateurs taking part in the sessions, some at home and many more on the road. The net was now a respected voluntary service to all who travelled by land and by sea. It now provided an almost professional service in respect to safety and communications to travellers and has since been a major player in many rescue operations by alerting the proper authorities to the dangers and emergencies facing travellers far from conventional means of communication.

On the lighter side, the net also acts as a contact point for friends and relatives who are not licensed amateurs to leave messages for passing to the travellers when they check in each day. All travelling amateurs are urged to leave the phone numbers of control stations with family and friends to ensure contact is not lost, particularly when off-roading in remote areas. The types of messages handled range from the inevitable 'death and disaster' ones to the light hearted 'happy birthday Mum from Sue and Jack', or "good news, Dad, Helen's baby was a girl and your antennas did not blow down in that last lot of heavy wind", or Roy,

will you tell VK8ABC that I will catch him on 7070 at the usual time tonight. Apart from this kind of traffic from home there are always base stations at home waiting to take travellers off frequency just to ragchew. It is, by and large, a very versatile platform for all sorts of contacts.

As the volume of traffic increased, so did the number of base stations from almost all over Australia, to ensure no traveller's call would go unheard or unanswered. Some of these stations helped a little; some helped a lot; and some are still part of the net. A brief roll call of those stations would include VK6KC, VK6ART, VK6B0, VK6YE, VK6HH, VK6TB, VK6RJ, VK6ZZ, VK5ARM, VK5RI, VK5AAX, VK3YK, VK3PN, VK3UX, VK3KF, VK2HI, VK2EDM, VK2ALH, VK2IV, VK4YG, VK4AF, VK2CJD, VK3BMS, VK4ACU, but this list would be far from complete, as many other people also did their share. I know that all those who presently run the net would wish me to say on their behalf "thank you all who have helped, and we hope that you still listen sometimes and enjoy the net and think to yourself "I helped to get that net started" and then feel a little sense of pride in having helped do something worthwhile. VK3UX, VK6ZZ and VK2HI are all silent keys now I am told, but their help is still remembered.

With the passing of time, Arthur's involvement in the net became more and more time consuming and, in some respects, almost a full-time job, especially when he was involved in emergency situations such as marine disasters. At these times Arthur could be found in his shack day and night doing what needed doing until relieved by the proper authorities or the situation was satisfactorily resolved. I understand that after the 'White Waves' incident, Arthur's XYL Eileen did suggest that perhaps they could meet socially once a week at the supermarket to discuss the world outside amateur radio and perhaps buy sufficient of the necessities of life to see them through until the following week. I believe that shortly after this discussion, Arthur decided to take Thursdays off and leave Reg to run the net in his absence.

By now record keeping too had become state-of-the-art, as both Arthur and Roy had computers and had jointly developed a format for their use. Now after a station called in it was positively known who it was, where it was, how it was and where it was going to be that night ... all handy knowledge if they were needed or went missing. Another firmly established procedure is the call 10 minutes before the advertised starting time 'any emergency or priority traffic'. This announcement is initiated by net control in Perth and is repeated by the VK5 relay station. If there is no VK5 relay station available then another relay station, either in the centre or in the east, is invited to broadcast this announcement. This gives anyone with problems a clear frequency on which to contact the net. There are those who know just how important this pause in proceedings can be.

Ultimately Arthur felt that he had contributed as much as he could to the net and, in view of the close working relationship he had with Roy VK6B0, asked him if he would assume the control position for the net.

Roy agreed to accept this position and he, in turn, asked Peter VK6HH to fill the position he had just vacated so he too could have one day a week off to go to the supermarket. These XYLs wield formidable power, don't they?

In 1988 the name of the net was extended to identify it better by changing to 'The Australian Travellers' Net" and the frequency moved up the band to 14.116 to escape the overwhelming clamour of the recently arrived packet radio stations that were wiping out those trying to contact the net on the long used and well recognised frequency. Not only was this a quieter frequency, but it was more in line with the new band plan. Now, not only is there a new name, but also a new frequency.

Now the net is recognised internationally as a valuable and reliable net comparing favourably with SEANET and maritime nets of similar standing. As previously mentioned, the net is widely used by amateurs marine mobile, but is also used by visiting amateurs who have obtained a reciprocal licence for use during their stay in Australia. It is also known as a contact point for anyone in distress, and can be used freely by anyone for the duration of their emergency, licensed amateur or not. In essence, this net can and does do a lot for all kinds of people.

From 1987 until now, at the peak of the season about 70 callers per day, made up of mobiles and contact stations have checked into the net. One can only surmise that these numbers will increase when the present economic crisis is past and people hit the road and take longer talk breaks at lunch time. Some incidents come to mind where the net has been able to render valuable assistance in times of distress. In 1987, a boy in a party visiting the Purnie Bore, which is on the edge of the Simpson Desert, broke through the hard crust of the mud surrounding the bore and plunged feet first into the boiling mud below, scalding his legs terribly.

Getting the picture, Arthur contacted the Royal Flying Doctor Service and acquainted it of the situation, and was advised of the first-aid to be given. He relayed this information to the accident site, and kept in touch with the truck carrying the nursing sister and medical supplies from Oodnadatta through the RFDS base at Alice Springs, whose operator was a licensed amateur, so keeping both parties up to date on the state of affairs.

On another occasion, the net picked up

Keith Williams VK6KC who started the Net.

an outpost station with a weak signal trying to contact the RFDS at Alice Springs, but which, because o the weakness of its signal, could not trigger the auto emergency alarm. Contact was made with the base at Alice Springs by phone, and they came up on air and took over the problem.

In 1984, an amateur came upon a man unconscious beside the road north of Sandfire Flats. He contacted the net which alerted the SES, which then handled the problem.

The writer is deeply indebted to VK4ANN, who contacted the net when Urgent or Priority Traffic was called for on behalf of our daughter in Brisbane. Our grandson had been rushed to hospital and found to have what proved to be an inoperable brain tumour and was given only hours to live. Full praise must be given to the police at Yunta in SA, who sorted things out for us and organised us on to a plane for Brisbane. The boy died just as we landed, but we were at least with our daughter when she needed us most. Our thanks and full praise to the amateur fraternity which made this possible.

A note just to hand advises me of an incident of recent times when a family travelling the Pine Creek to Jabiru road were involved in a serious motor accident where four people required ambulance transport to hospital. Fortunately an amateur happened upon the scene and put out a very early call to the net which was picked up by Roy VK6BO who was readying things for the day's operation. After obtaining all the relevant information he contacted the WA Police Communications Network and it arranged for the people to be transported to Katherine Hospital in a matter of hours. One of the injured had later to be flown to Darwin for treatment that was not available in Katherine.

Not long after this the net was approached to see if it could locate an amateur holding a limited call, and so not on the net. They announced the details on the next session and an amateur located the car in the blow holes area north of Carnarvon. This resulted in a very urgent message regarding family welfare being passed in a matter of only a few hours.

All this is but a sample of the work done by the net. Some of the messages bring sadness to the recipient, others joy and others laughter for all concerned. How many of us relate to the message to Dad from his son that says he is forwarding the new water pump for the Gemini to Banka Banka Station and it should be there by a week from tomorrow.

From what I hear the Australian Travellers' Net has now become big brother to a new net designed to watch yachties across the Indian Ocean ... logically called "The Indian Ocean Maritime Net". It too grew from a casual contact which revealed a 'hole' in the maritime network's coverage of this part of the world.

Some time back the net had a M/M (OK4KOB) with three on board crossing the Indian Ocean to South Africa and using but five watts of power on the transmitter. Contact was maintained with the net until propagation made contact impossible, and when the yacht reached Madagascar, Beda OK4KOB changed to the Durban net. This experience showed that nobody was providing a service for boats crossing the Indian Ocean. This contact led to others, and now we have an 'Indian Ocean Net' running at 11.15 Zulu each night, with a calling frequency of 14.316 and then moving to an operating frequency usually somewhere between 14.322 and 14.337, depending on QRM. Presently the working frequency continues to be announced for 10 minutes after it is determined, so latecomers will know where to find it.

Roy Chamberlain VK6BO who took over from Arthur VK6ART.

For those interested in the 'mechanics' of the net, and how it is run, I am indebted to Peter VK6HH for the following information. The concept of one man controlling the net, with a second man as a relief one day a week, has gradually changed to what could almost be called a control team based in Perth. Roy VK6BO is acknowledged

Arthur Oliver VK6ART who ran the Net for many years. (Photo courtesy Neil Penfold VK6NE).

as being the net controller, with Peter VK6HH being his 2IC, who takes over alone one day a week, or more often as required when Roy has to attend to other commitments. Generally these two men work as a team and they would be very unusual circumstances indeed, if ever the net was left without a controller in Perth. To further increase the efficiency of the control, a 2m link is maintained throughout the sessions on 144.625. This is a handy way to report 'doubling' or to confirm information received from faintly heard mobile stations, and this is doubly handy when one control station is experiencing local QRM caused by rain static or the like.

1. Both stations use the FT107M as their main transceivers.
2. Both have standby gear. Roy has a TS430S and Peter an IC735.
3. Roy has an NEC computer, and Peter an Amiga. Both computers contain the same information.
4. Roy uses a tower-mounted Yagi, and Peter a two-element Quad atop a mast, and a 107' dipole with tuned feeders through a Z-match as a back-up antenna.
5. Both shacks have Telecom phones.
6. Roy has a back-up generator for use should mains power fail during the session.

Control Station Telephone Numbers

These phone numbers are available to all to use to enquire about the net itself or to leave and receive messages for or from travellers. When ringing these numbers, please remember to take into account the time differences across Australia and give the callsign the message is for.

Roy	VK6BO	(09) 331 1825
Peter	VK6HH	(09) 397 5772
Bob	VK5RI	(08) 93 4001
Alex	VK3BMS	(03) 579 0006

There has been a spin-off for amateur radio arising from the use of this net. Some XYLs who previously had little or no interest in amateur radio have become avid sked-time watchers, later progressing to obtaining an amateur licence for themselves, as have some of the passengers who have been afield in vehicles operated by touring amateurs. Thus amateur radio has become a comfortable way of keeping in touch with those either at home or touring about.

I think this just about covers the story of the Net. It is a very brief and generalised coverage, but to tell it properly and mention all the people one would really have to write a book. Already I think I can hear rumblings from those electronically oriented readers who are objecting to this bloke taking up valuable space in the technical journal of the society with a rag-chew article about travel tales, so let me say now there are many facets to our hobby as there are many colours in a rainbow, and don't we all get a thrill at seeing that wonderful bow across the sky, especially when our own favourite colour shows through clear and bright? **ar**

Peter Harrison VK6HH who runs the Net one day per week.

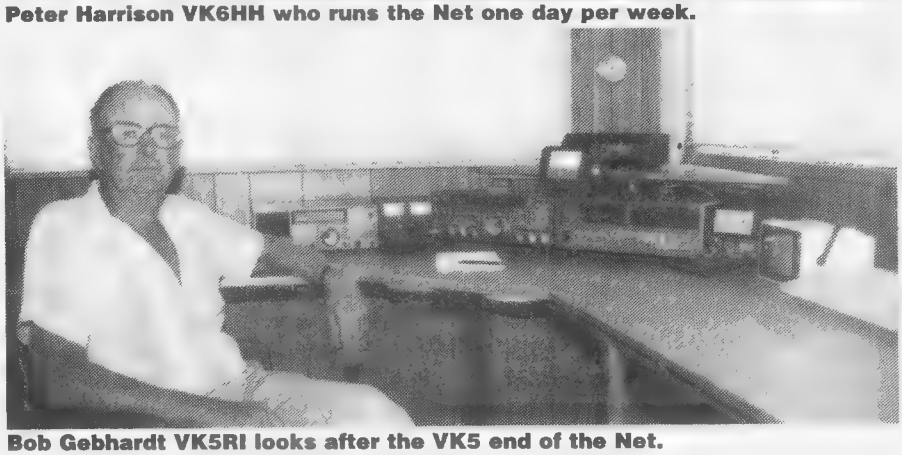

Bob Gebhardt VK5RI looks after the VK5 end of the Net.

SOME THINGS HAVE NO COMPARISON

amateur radio action

The magazine for the serious radio operator

AT YOUR NEWSAGENT EVERY MONTH

Willis Island VK9

Stephen Pall VK2PS
PO Box 93
Dural 2158

It was in late 1989. As I was tuning across the band, I heard a "CQ DX" call. "This is VK9TR on Willis Island," said the Australian voice. Suddenly the band was alive and, within minutes, the transmitting frequency of the Willis station became a "dogpile". Willis Island was on the air and continued to be so until the middle of 1990.

SINCE TREVOR'S RETURN TO Adelaide, I have exchanged several letters with him. Trevor, who these days gives his callsign as VK5FG, supplied me with fascinating information about life and activity, past and present on one of the remotest islands on the Australian coastline. But before I proceed to quote from Trevor's letters, let's look at the history of this island. Willis Island is part of an island group lying in the Coral Sea, and consists of North Cay, Mid Islet and Willis itself. They are 267 nautical miles north-east of Townsville at latitude 16°-17' South, and longitude 149°-58' east.

The islets were discovered in 1853 by Captain Pearson of the ship *Cashmere* - he named them after the owner of his vessel. The island remained unnoticed and uninhabited, except for a survey done by Captain H M Denham of HMS *Herald* in 1860, until the end of the First World War.

The north-eastern part of Australia is visited quite often by cyclones. In September 1921, the political pressure to establish a cyclone warning station on an island in the Coral Sea prompted the then Minister of Territories, the Hon A Poyton, to ask the Commonwealth Director of Navigation, Captain John King Davis, to submit a report about the feasibility of establishing such a station, having regard to the "dangers and safety of personnel remaining on the island in the cyclone season".

Captain John K Davis, who was the commander of the *Aurora* in 1911-1914 during the Australasian Antarctic Expedition and after whom the Australian Antarctic base was named, was aware of the great value to shipping, if such a storm warning station was established. He himself led the exploring and working party to the island in October 1921 on the ship SS *Innisfail*, and after arriving back in April 1922 he submitted a 14-page report which the Australian Senate ordered to be printed on 3 August, a total of 902 copies at a cost of £26 which, in those days, was quite a sum of money. The report reveals that the island is approximately 583 yards long (533 metres) and about 212 yards wide (194 metres). However, the usable grassed portion is only about 468 yards (427 metres) by 150 yards (137 metres). On this small area of usable land, Captain Davis, 13 other helping hands and the crew of the ship erected in the short time of three weeks: living quarters for three men, a "wireless telegraphy house", two wooden radio masts of approximately 80 feet high (26 metres), installed the radio and meteorological equipment and provisioned food and other stores to last for six months, and 1600 gallons of drinking water in tanks and casks. Captain Davis writes in his report:

"On 1 November, communication with Australia was effected with one mast, and the following message was despatched to the Minister for Home and Territories: "Work of erection of Willis Island Station proceeding satisfactorily; job has proved a heavier one than anticipated. All hands are in good health, and it is hoped, if weather continues fine, to despatch the *Innisfail* from here on Monday evening, 7 November. Work then remaining can be completed by resident party - Davis."

The first meteorological report was sent from the station on 8 November 1921, and 70 years later in 1991 Willis Island still provides important meteorological information to the Australian Bureau of Meteorology. However, the means of communication have greatly changed since.

A letter written by Mr Eric Riethmuller in 1981 at the age of 78, and who, according to the information given to me, passed away three or four years ago, gives a very interesting insight into early life on the island. Riethmuller was on Willis Island at various times, starting in 1927 as an observer-cum-radio officer. He writes to his modern-day colleague at Willis in September 1981 as follows.

—The communications from 1921 when the station was established by Captain Davis is in great contrast to what you have today (1981). Willis Island began with the callsign CGI and worked Cooktown (VIC). CGI later changed the callsign to VIQ, had one 1.5kW rotary spark transmitter with two frequencies - 500kHz and about 300kHz (in old language 600 and 800 metres). The transmitter was driven by a 5HP upright single cylinder petrol engine via a 110V DC generator, and these two made such a racket that in the receive mode, the petrol engine had to be switched off (... to hear the incoming signals). The operator had to dash in and out of the engine room, swinging the crank handle with rapid enthusiasm, transmit, switch off and listen and hope that his opposite station in Cooktown did not reply too quickly — writes Riethmuller.

During the cyclone season communication was very difficult from Willis in the early years, due to the ever-present static noise. The weather reports were sent in five-letter code groups, and each group had to be repeated, sometimes nine times

between the two stations. Willis was manned during the 1920's and 1930's according to Riethmuller's letter, with personnel from Amalgamated Wireless (Australasia) Ltd (AWA) marine radio department. There were two people on the island - one radio officer/observer and one handyman/cook, from the months of May to November. Life was tough in those times. Riethmuller continues:

Before leaving Sydney I spent several days at the weather observatory, where a man named Nelson initiated me into the mysteries of how to read the mercury barometer and look after the anemometer, barograph and thermograph.

I sort of remember the barometer, temperature etc had to be read each day and recorded in certain books. For weeks on end the weather changed little, SE trades (wind) blew consistently, the sooty terns wailed all night, and very little rain. On arrival there about May 1928, I found the station in a run-down condition. Most things had been given over to the cockroaches, corrosion and humidity with sad results. One item completely ruined was the large medical store. For that season, as later, practically all food was tinned or bottled. Things such as flour, sugar, biscuits, dried fruit were all done up in sealed cans to defeat the weevils and ants plus humidity. We had a dozen or so hens that kept us in eggs. Hens were fed on wheat mostly, and kept in a small yard to the north of the wireless hut. Both buildings were referred to as "huts" though built of reinforced concrete. For cooking, we had a three-burner kero stove and a primus. Stove was needed for the breadmaking. We mostly were proud of the results with the bread. Yeast was the old grandma type, hops potato cork tied down in a bottle. When "H" (the offsider) missed his beer, he used to take a mug of the yeast and pour it down his throat. At the end of the first session we were short of flour. Ration was half a slice of bread per meal, caused partly by the month-late arrival of the *Morinda*, which had run aground up New Guinea somewhere the previous trip.

Later I was there with Snape, also from the Marine (department of AWA) and sometimes we followed one another. He also was an eager beaver, and we two put the station in order. Took a couple of years to do so. This even impressed the high command to such an extent that old Fisk (then chairman of AWA) ordered that we be given a bonus of 30 pounds for "good work at Willis Island". Weather men came with the

The pioneers of Willis Island, around 1930s. Note string on the left to operate the camera.

The original rotary spark transmitter on Willis Island in the 1920s.

November relief, plus a second radio Wallah (radio officer); I stayed over the summer season. Before returning for my second trip towards the end of 1928, I spent several days in the AWA castle in York Street making a short-wave transmitter under the direction of Joe Reed, one of the AWA engineers. When back on the island, this little toy changed our whole communication. We transmitted on 32 metres, received VIT on 600 or 700. His glorious signal came in all over the static and dynamotor noises. We still had to run the engine and the $1^1/_2$ kW set to obtain the 1000 or so volts for the SW set.

The AWA personnel on Willis later were replaced with the personnel from the Bureau of Meteorology. After the war, the Overseas Telecommunication Commission assumed responsibility for radio communications, but in 1966 the Australian Bureau of Meteorology took over sole control, which is still has to this day.

Today the island boasts quite a range of modern communication equipment, such as 500 and 1000W CODAN HF sets (previously RACAL) a digital data transmitting system, a back-up RTTY system, telephone etc. The power is supplied by two air-cooled DEUTZ diesels with 40kVA alternator sets and a water-cooled CUMMINS with 50kVA alternator set attached. At present, there is also a 3cm manual wind finding radar, type WF2, able to track targets of 500mm to a distance of 80 to 100km. The two wooden masts of yesteryear were re-

placed with two marine aluminium masts 24m high with stainless steel rigging, and dipole antennas with baluns. There is a sloping multiband antenna in the range of the 5 to 30MHz, and another half Delta antenna for the 2-14MHz range.

The scientific study and information gathering carried out on Australian outposts - Willis Island, Macquarie Island, the bases in

Trevor VK9TR operating on Willis Island. Note the "local brewery" advertisement.

Antarctica, just to name a few - attracted radio amateurs from the early days. Amateur radio as a hobby neatly fitted with their scientific background and profession. Amateur radio in the early days was the only source of communication with the loved ones on the mainland, and even today, where there is a telephone on practically every base, amateur radio still plays an important role, not to mention the DX aspect of the hobby. Ken McLachlan VK3AH, in an earlier article about Willis Island in the September 1982 issue of *Amateur Radio,* describes these amateur activities in more detail. I list here their callsign and the year of operation, supplemented by my own observations, just for the record. The list is not complete, and further information about amateur radio operations on Willis is welcome.

John VK4JO was there in 1963. VK4WV was there in mid-1964. John VK4HG in November 1967, Gavin VK4EV in 1968 and Kevin VK9ZC in 1973. Dave VK9ZD went to Willis shortly after his previous tour of duty, lasting 12 months on Macquarie Island. Dave was followed by Mike VK9ZG and Tony VK9ZH in 1982, Andy VK9ZA in August 1982 and John VK9ZJ in January 1983. Graham went there as VK9ZW in May 1984, and Trevor VK9TR was there from November 1989 to June 1990. Harry VK2BJL spent a little time there when visiting the island in a sailing boat, and used the call VK9ZR. There is no amateur activity at present on Willis. Amateurs who were active from Willis were always sought after for contacts in the DX world. Willis Island is just one of nine locations with a VK prefix, which is considered to be a separate "DX country" according to the rules of the DX Century Club.

One of the most successful recent DX operations was the one by Trevor VK9TR. His cheery voice, politeness and patience towards sometimes not-so-polite DXers, and his willingness to participate in several net operations, had left a very pleasant memory and gratitude in the heart of the serious DXers. Trevor, who is a radio technical officer with the Australian Bureau of Meteorology, spent eight months on Willis. He received his first taste of amateur radio at Macquarie Island in 1980-81 watching VK0DB operating DX. Returning to the mainland, he obtained his full call in 1982 as VK5BTR. After the death of his father in 1987, he took over his late father's callsign VK5FG. Since returning home from Willis, Trevor had very little time for amateur radio. His technical skill is very much in demand by his employer, and he spends quite a lot of time organising the installation of automatic weather stations spread across South Australia. Trevor's letters to me describe the life on Willis as totally different from those times before him in the mid-1920s and 1930s.

Let's now sit back and enjoy the extracts from his letters. He describes his life on Willis as "working and DXing in paradise".

It is probably true to say (writes Trevor) that some of us have some grand ideas as to what paradise should look like. Some no doubt would be disappointed, but I certainly was not. That place of paradise was Willis Island, that small coral island in the Coral Sea. I guess, not knowing what to expect, off I went to Willis, armed with a plastic container of "real things" (valves) and a trusty FT200, contending that I may at least to be able to make a contact or two. Well, in the end, I was a bit out by two things: I ended up with a Kenwood TS130S and 7641 contacts. The staff at Willis for the eight-months stay were the grand total of four, three weather observers and myself, with the male to female ratio of 3:1. With this small population, the weather observers being responsible for the daily routine of weather observations, including upper atmosphere balloon flights and synoptic observation. There were times when working in the power house in the middle of the wet season in my capacity as station technical officer, I thought I was nearer to hell than paradise. But the ever-present thought of sitting under the palm trees in the gentle breeze, sipping the local brew of "Booby Bird Bitter" always won out, and added to that paradise touch.

In another letter, Trevor mentioned that brewing beer is another interest of his, but that hobby has been made considerably easier by the use of brewing kits: "it does take the fun away from it, a bit," he says. Just like amateur radio: home-brew gear has been replaced by factory built black boxes.

Beer was also mentioned in Riethmuller's letter written in 1981:

Thinking back to the year of 1927 (he writes) my offsider "H", a man aged 45, and I, travelled to Willis on a Burns Philp island steamer named *Morinda*. The trip took one week, and "H" looked "deeper" into the beer bottles than was advisable.

Arriving at Willis, "H" was incapable of descending the gangway to the surf boat, so he was put over the side in the cargo sling,

The four "residents" of Willis Island. Left VK9TR.

together with the beer supplies acquired by him on board ship. Most of the bottles broke before reaching the shore. There I was, full of inexperience, a big heap of stores scattered on the beach, amongst

which sat the inebriated "H". Incidentally, three weeks later "H" still appeared "sickened" and hard to understand, so I looked in one of the storerooms where there had been six bottles of port wine supplied as medical stores. Only two were left, so that night I quietly buried them in the sand. And all that happened in 1927.

Back to Trevor's letter. He writes:

One had to be a diesel mechanic, plumber, radio technical officer, cook, electrician and, at times, general father confessor, so you can see, it's a pretty interesting life if you do not weaken and succumb to savouring too much of the highly rated Booby Bird Lager, the local home brew. (Guess who was also the chief brewer?) By the way, the local brewery also sponsored the advertisement that can be seen on the photo of yours truly operating inside the equipment room. One of the pertinent facts that I took no time to discover was the fact that this paradise also had a five-star food supply and a view from almost every room. Some of the feathered residents were a little noisy at night and in the morning, but generally well behaved.

There is a large bird population on Willis. Sooty terns, noddy terns, black and pink foot booby birds, frigate birds and migratory birds like kingfishers, falcons and egrets, to name a few.

Turtles also appear around November, to start laying eggs, which hatch in January, normally at night, and present a sight witnessed by few people, as the baby turtles make for the sea in their thousands. People always ask how difficult it must be with only four people on the island. Well, the answer is relatively simple. Although the situation lends itself to a great study in human relations, surprisingly, people were not what you call bumping into each other throughout the day, except if it was to help out with some communal task. The only real assembly of the entire population was normally at evening meal time for the five-star treat. When asked about the scientific significance of Willis Island, I am always hesitant, because,as we are all aware, the value of the almighty dollar always rears its ugly head, but it is very difficult to correlate the monetary expenditure to collected data. All I can really say is that, weatherwise, Willis Island data are of great value to the Queensland region, and possibly to the Australian east-coast network of weather forecasting.

Willis is certainly a great place to operate amateur radio. I say this not only from my maybe biased viewpoint, but on behalf of the other three people who were not in any way connected with the hobby.

Whilst it was one of my pastimes, and has been since 1982, it also gave great entertainment to the other residents, as we often sat around the "rig" – "Booby Bird Bitter" in hand, listening to world wide conversations taking place live. The extra bonus was of course, the fact that the others could participate by listening. I think that this is one of the great attributes of the hobby, hence creating the feeling that maybe the finesse of paradise is participation.

I made 7641 contacts (writes Trevor again, in a different letter) with the approximate breakdown of the QSOs as follows:

USA	45%
Europe	25%
Japan	15%
South America	5%
Canada	3%
NZ, Australia & USSR	7%

The difference between the percentages of USA and European contacts is due to the type of antenna used. It was a V-beam Type 4131, not rotatable, and as it pointed in a NE direction it was perfect for USA and Canada. The other V antenna was pointed SW, but was a little low for Europe, but it did prove okay for South Africa.

Due to the physical size of these antennas, they were difficult to load on 21MHz, and out of the question on 28MHz. (A small dipole was used for these contacts). A breakdown of contacts on the various bands was as follows:

10m	5%
15m	10%
20m	80%
40m	5%
80m	only occasionally

At this point, and just getting under way so to speak, I found it a great help to start networking on the Family Hour net with Gray VK4OH and the most helpful USA net controllers Bob KI4RU, Bud KC4DWI and others on that net, as well on the "222" net with Jim VK9NS and his colleagues, (of course, one has to mention the veteran of many nets, the ANZA net, with Percy VK4CPA and his helpers.

Personally it was not from the 7641 QSOs logged that I derived the enjoyment of my stay on Willis because, as all DXers know, that is only the start, but it is the fact that there are so many great people out there, some of them very lonely and handicapped, but all having the opportunity to participate in communicating with each other. I really had no intention of becoming so involved, but found I enjoyed it so much that I wouldn't hesitate to return to paradise if the opportunity presented itself again, but I would certainly go a little better prepared.

In closing, I have to admit that Willis Island is a fantastic place, whether it is working, washing, cooking, fishing, relaxing with a booby bird Bitter or plain DXing with a Kenwood 130S, 85W output into a V-beam: it is paradise!

Acknowledgement of material used:

* Several letters written by Trevor VK9TR and photographs supplied by him.

* Photocopy of a letter written by Eric Riethmuller, and copies of old photographs of the old wireless station, courtesy of the Australian Bureau of Meteorology.

* Report by Captain John K Davis, Commonwealth Director of Navigation, Willis Island Meteorological Station, 3 August 1922.

* *Australian Encyclopaedia,* 1963 edition, Volume 4, page 377b and volume 9, page 315b.

* Article about Willis Island written by Ken McLachlan VK3AH, *Amateur Radio,* September 1982.

ar

ATN ANTENNAS
& Accessories

56 Campbell St, Birchip Vic 3483
Phone: (054) 92 2224
Fax: (054) 92 2666.

Ask for a free catalogue

We manufacture a comprehensive range of HF, VHF and UHF antennas, baluns, power dividers etc to suit your application. Three of our log periodics provide continuous coverage from 13-30MHz, including WARC frequencies, and replace outdated tri-banders.
Now in use in 29 overseas countries and six continents.

- Rotators by Create, coax cables & non-conducting guy/halyard materials.
- B&W all frequencies 1.8-30MHz end fed vee. All frequencies 3.5-30MHz folded dipole. 10W, 100W, 1kW. No radials required.
- Hard-drawn copper antenna wire.
- Aust/NZ distributor for Create antennas/ rotators & Phillystran (Kevlar) non-conducting guying materials.
- High gain VHF & UHF amateur, scanning & TV antennas.
- Butt section triangular aluminium towers for fixed or tilt-over applications (refer March/April 1987 *AR).*
- Selections of power chips and TX tubes at friendly prices.
- VSWR/PWR meters by Diamond to 1300MHz 5 models. All in stock.

The Story of Stephen Frith

Part 4

H Karl Saville VK5AHK
2/1290 North East Rd
TEATREE GULLY 5091

In the final part of my story of Stephen, I will describe the effects of fitting a speech synthesiser to the computer. I had seen an article in an Australian electronics magazine back in February 1986 by Mark Bishop, of a speech synthesiser using the General Instruments SPO256-AL2 Speech Processor, but at the time I did not have a use for one. However, one of our TAD committee members, Richard Jackson, recently demonstrated a talking blood-pressure device which he had made up for the Blind Institute, and this rekindled my interest in speech synthesisers.

IT WAS CHEAP TO MAKE, AND fairly easy to program, and while it is not the best speech synthesiser, it is adequate for our purpose, and the more time you experiment with it the better the speech sounds get. One has to learn the basics of word sounds and how they are built up and it is like going back to primary school again.

The SPO256-AL2 is a single-chip N-channel MOS LSI device that is able, using its stored program, to synthesise speech or complex sounds. With 59 discrete speech sounds - called allophones - and five pauses, any English word or phrase can be created by addressing the appropriate combination of allophones and pauses.

This seemed to be the logical step to take with Stephen. Up to now he had been enjoying himself playing games and only occasionally using his word processor. When I fitted the speech synthesiser to his computer programs I thought it would enable him to speak to the world or, if the volume was turned up, he could shout to the world, but it did not turn out as I had thought.

I may have mentioned previously that Stephen is married to Linda, and that Linda is as helpless as Stephen, but for one very important detail. She can talk, and because she has a voice she has been educated and, as a consequence, she is really a normal intelligent being. She and Stephen have grown up together and, because of their very close association, there has developed a sort of body language between them. Stephen has no trouble at all letting people know what he wants because Linda seems to know, and she will tell you. Stephen has grown to depend on Linda in this way. And, because of his lack of voice, his education was not as good as Linda's. He finds it very difficult to express himself with a word processor. Now he has his computer and can put letters on the screen, the training staff at Julia Farr are giving Stephen regular lessons in spelling and grammar, and it is hoped he will become proficient in using his word processor in the near future.

In the meantime he prefers to play games on his computer and will spend all day long trying to beat the computer.

When you consider that a helpless and disabled person has about 12 hours or more each day to while away, you can realise they cannot be just putting messages upon the screen all the time. It would become very boring, as it is very slow and difficult, and also very tiring for him. It takes two to make a conversation, so he would need a friend, or someone, to be standing by his side for a considerable period, say 15 minutes or more for each sentence, and it could take a long time to hold a meaningful conversation. Most of the time he and Linda are on their own and there is the rest of the day to be filled in.

However, speech has made it possible for the computer to be more than just a machine that communicates, entertains or educates. It can become a personal thing, in fact a personality. The computer can announce the program that is to be used, it can say whose turn it is for the next move, or who won the game, and by how many points, and also congratulate the winner by name. We all like to be congratulated when we achieve something, and the disabled are no exception. The computer can have a name and announce itself to the operator. In other words, the computer responds in a friendly way and interacts with the operator. This is very importantly to a severely disabled person, as he can take command and be in control (maybe for the first time) of the situations created in the computer. He feels he is not alone any more, he has a real friend, a friend who talks to him and is his constant companion - and the disabled really do need friends.

Institutional Care

It is very strange, but you would think that, being in an institution, if a computer wrote out the phrase "I want a drink" and the speech synthesiser loudspeaker said "I want a drink", and if this was repeated many times, someone would come running with a drink. But, unfortunately, it does not work quite like this.

Institutions are run by the clock. Seven o'clock, and a nurse comes and prepares resident for wakey wakey. Eight o'clock, another nurse comes and takes the resident to breakfast. Nine o'clock, nurse takes resident to bath. Ten o'clock, nurse brings round the pills. And this carries on through-

DICK SMITH ELECTRONICS

MEGA BONUS DEALS!

MEGA BONUS $50 SAVING!

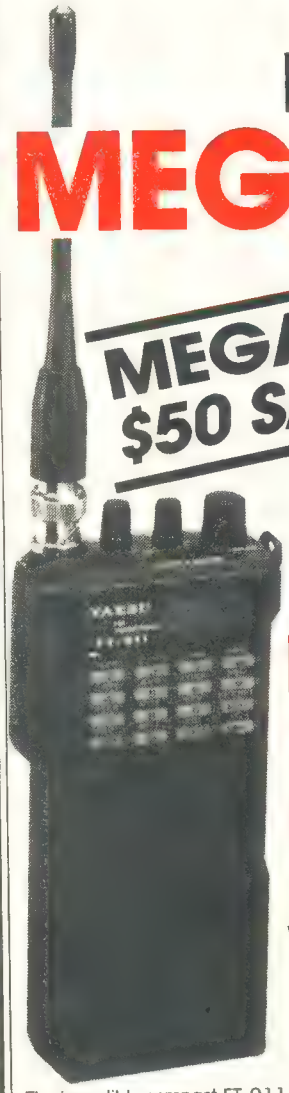

YAESU

FT-911 23cm HANDHELD

WITH 2 YEAR WARRANTY

The incredibly compact FT-911 transceiver provides superb performance on the 23cm amateur band and is designed for quick and easy operation. A multi-function backlit keypad allows fast frequency entry, plus programming of the 49 tuneable memories, setting of the programmable 'power saver' system and a host of other convenient functions.

The microprocessor control system also features 2 VFOs, rotary dial tuning in 4 selectable tuning steps, a backlit 7 digit LCD screen with bar-graph PO/S-meter, and a range of scanning features including busy channel, band, or selective memory scanning and priority channel monitoring. VOX (Voice Operated Tx) circuitry is also provided, allowing handsfree operation with the optional YH-2 headset. Comes complete with a long-life 7.2V 1000mAH NiCad battery pack, carry case, belt clip, 'rubber duckie' antenna and approved AC charger.

Specifications

Frequency Coverage:	1240-1300MHz
Channel Steps:	10, 12.5, 20 & 25kHz
Power Output:	1W @ 7.2V - 12V
Current Consumption -	
Stand-by (with 1 sec. save):	11mA
Receive:	150mA
Sensitivity (12dB SINAD):	Better than 0.2uV
Dimensions:	55 x 155 x 32mm

$699

Cat D-3380

FT-912R 23cm MOBILE TRANSCEIVER

2 YEAR WARRANTY

Here's a compact 23cm FM mobile transceiver that really packs a punch! It's ideal for both mobile and base stations and has a wide frequency coverage (1240-13000MHz), plus 10 watts RF output. A rugged die-cast chassis together with extensive use of surface-mount components gives excellent RF isolation and long-term reliability. What's more, the easy to use control panel has a backlit LCD screen with auto brightness control and PO/S-meter. As well, it has 4 selectable tuning steps, a total of 21 memories, inbuilt CTCSS tone squelch encode, one-touch repeater reverse and a variety of scanning functions. Comes complete with a mobile mounting bracket, MH-14A8 hand microphone and DC power lead.

$899

Cat D-3390

MEGA BONUS - *SAVING OF $70!*

With every FT-912R you can purchase the Diamond F-1230A 13.5dBi gain vertical base antenna for just **$169** (Cat D-4870, usually **$239**)

FT-650 6m/10m/12m TRANSCEIVER

YAESU

2 YEAR WARRANTY

The FT-650 is a high power all-mode mobile transceiver packed with specialist features for the seious 6m operator. There's continuous coverage reception from 24.5 to 56MHz (so you can follow the rising M.U.F. and work the DX earlier) and 3 direct digital synthesizers (DDS) for clean transmit and receive operation. It has 6 front-end Band Pass Filters and a 2 stage low noise preamp for exceptional sensitivity (SSB typically 0.125uV). User selectable tuning steps, manual and automatic IF Notch filters, IF Shift and IF bandwidth controls give optimum performance under difficult conditions. In addition, DDS gives SSB bandwidths of 1.8, 2.0, 2.2 and 2.4kHz as standard. With Yaesu MH-1 hand microphone.

Cat D-3250

$2295

MEGA BONUS - *VALUED AT $199!*

With every FT-650 you get a HF/6m SWR/PWR meter with accurate P.E.P metering at no extra cost. Cat D-1360

FT-411E 2m HANDHELD

Superb performance on the 2m band. Top of the line features, reliability and value for money from the name you can trust...Yaesu. Only the compact FT-411E offers these features as standard ...

- 144 to 148MHz transceive operation, with enhanced receiver performance
- Ultra long life 1000mAH 7.2V NiCad battery pack (supplied as standard!)
- 2.5 watts RF output as standard, 5 watts with 12V DC (or optional FNB-11 NiCad)
- Better than 0.16uV (12dB SINAD) sensitivity
- Stand-by current consumption (1sec SAVE) only 7mA
- Programmable power saver for extended operating periods
- Keypad or dial frequency entry, with selectable tuning rates
- 49 tuneable memories which store repeater offsets
- Band, memory, priority or limited-band scanning
- Just 55 x 155 x 32mm
- Carry case, belt clip, carry strap and approved AC charger
- Now with enhanced receiver sensitivity and improved strong signal handling!

Cat D-3350

$479

2 YEAR WARRANTY

MEGA BONUS

With every FT-411E you get a bonus FNB-14 1000mAH NiCad battery (Cat D-3351) ***VALUED AT $99.95***

* Offer valid until the 29th of August or while stocks last.

FT-470 2m/70cm HANDHELD

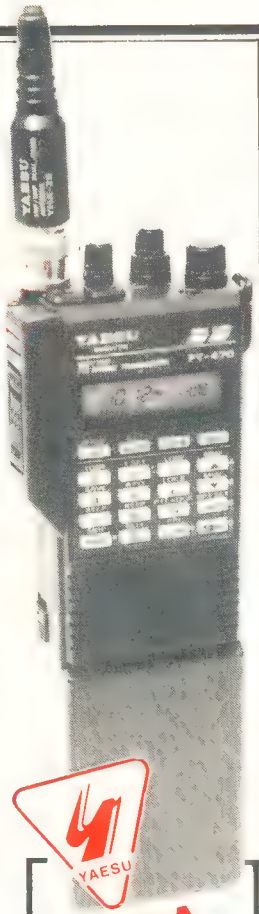

Dual-band performance at its best! The compact FT-470 is an easy to use handheld transceiver that gives you greater flexibility with a sensible microprocessor control system for both 2m and 70cm operation.

- 144-148MHz and 430-450MHz transceive operation
- Single band or dual-band receive, or full duplex cross-band operation
- Ultra long-life 1000mAH 7.2V NiCad battery (supplied as standard!)
- 2.3 watts RF output (both bands) as standard, 5 watts with 12V DC
- Back-lit dual 5 1/2 digit frequency LCD screen
- Better than 0.16uV (12dB SINAD) sensitivity on both bands
- C.T.C.S.S tone squelch encode/decode inbuilt as standard!
- Stand-by current consumption (with 1 sec save) only 8mA per band
- Keypad or dial frequency entry, with selectable tuning/scanning rates
- 21 tuneable memories and 2 VFO's per band
- Band, memory, priority or limited band scanning
- Complete with carry case, belt clip, carry strap and approved AC charger
- Only 55 x 180 x 32mm

Cat D-3360

$749

2 YEAR WARRANTY

MEGA BONUS

With every FT-470 you get a bonus FNB-14 1000mAH NiCad battery (Cat D-3351) ***VALUED AT $99.95***

*Offer valid until the 29th of August or while stocks last.

FT-747GX COMPACT H.F TRANSCEIVER

The FT-747GX is a compact SSB/CW/AM and optional FM transceiver providing 100 watts PEP output on all 1.8-30MHz amateur bands, and general coverage reception from 100kHz to 30MHz. Convenient features include a front panel mounted speaker and an easy to read backlit digital display, dual operator selectable tuning steps for each mode, dual VFO's for split frequency operation and 20 memory channels (eighteen of which can store split Tx/Rx frequencies). Wideband 6kHz AM and narrow 500Hz CW IF filters are also a standard feature. Complete with Yaesu MH-1 hand microphone.

Cat D-2930

$1299

2 YEAR WARRANTY

MEGA BONUS

Your choice of 2 Mobile One HF whips from our range of 80m, 40m or 20m whips ***WORTH OVER $85.***

* Offer valid until the 29th of August or while stocks last.

YAESU

B1353

DICK SMITH ELECTRONICS

SAVE $30

A PRICE BREAKTHROUGH

Don't miss this best ever price on the popular Diamond X-200A dualband 2m/70cm base station antenna. Hurry in and save $30 on this high performance Japanese vertical antenna (while stocks last). The X-200A uses robust FRP (fibreglass reinforced polyester) tubing construction and a ground plane to provide excellent all-weather operation and a clean low-angle radiation pattern. This sturdy antenna has stainless steel hardware throughout and solid mounting hardware for a stable connection to your mast.

Specifications

Frequency -	144-148MHz, 430-450MHz
Gain -	2m:6dB, 70cm:8dB
Max Power -	200W
Length -	2.5m
Type -	2 x 5/8 wave (2m) 4 x 5/8 wave (70cm)

Cat D-4860

$169 DIAMOND ANTENNA

ST-7500 2m/70cm MOBILE ANTENNA

A high performance dualband antenna at a down to earth price! The ST-7500 is just 1 metre long and uses a ground independent design to provide high gain (3dB on 2m, 5.5dB on 70cm) with a maximum power rating of 150W. Quality construction plus a tiltable whip structure makes it especially ideal for the discerning mobile operator. Requires SO-239 antenna base (D-4035 recommended) Cat D-4810

BRANER **$79.95**

2m/70cm HIGH GAIN HANDHELD ANTENNA

The Diamond RH770 is a high gain telescopic dualband antenna for use on handheld transceivers when maximum range is required. It provides approximately 3dB gain on 2m and 5.5dB gain on 70cm. It weighs just 85 grams and collapses from 93cm to 23cm for easy storage. Comes fitted with a standard BNC connector to attach to your transceiver. Cat D-4336

$79.95 DIAMOND ANTENNA

HUSTLER

HUSTLER HF TRAP VERTICAL ANTENNA

The tradition continues! The 5BTV is yet another masterpiece from the people who have been making antennas for over 33 years. This rugged 5 band HF trap vertical uses Hustler's exclusive trap design (25mm solid fibreglass formers, high-tolerance trap covers and low loss windings), for accurate trap resonance with 1kw(PEP) power handling. Wideband coverage is provided on the 10, 15, 20 and 40m bands (SWR typically 1.15:1 at resonance, less than 2:1 SWR at band edges), with 80kHz bandwidth typical on 80m at less then 2:1 SWR. An optional 30m resonator kit can also be installed without affecting operation of the other bands.

High strength aluminium tubing and a 4mm (wall thickness) extra heavy-duty base section provides optimum mechanical stability. What's more, stainless steel clamps and hardware guarantee a longer life. At just 7.65m, the 5BTV can be ground mounted (with or without radials, although radials are recommended), or it can be mounted in an elevated position with a radial system. Unlike other antenna designs the 5BTV can be fed with any length of 50 ohm coax cable. Cat D-4920

$299

30m Resonator Kit
Adds 30m coverage and includes all hardware. Cat D-4921 **$79.95**

VRK-1 Radial Kit
Suits 5BTV (with or without 30m option) Cat D-4922 **$59.95**

HUSTLER RX-2 2m 5/8 WAVE MOBILE

Here's value! A quality 2m 5/8 wave magnetic mount antenna for mobile or temporary base station use. Comes complete with 4.5m of coax cable with a PL259 attached. It has 3dB gain with a power rating of 100W maximum and a flexible stainless steel radiator to minimise wind loading.

HUSTLER Cat D-4805 **$49.95**

DS XPRESS PHONE & MAIL ORDER SERVICE & YAESU BROCHURE HOTLINE

Outside Sydney (Free call) **008 22 6610** Sydney & Enquiries **(02) 888 2105** FAX **(02) 805 1986**

Or write to DS XPRESS, PO BOX 321 N/RYDE NSW 2113

YAESU STOCKS NOT HELD AT ALL STORES. PLEASE CONTACT YOUR LOCAL STORE FOR STOCK AVAILABILITY, OR ORDER BY PHONE 008 22 6610

NSW • Albury **21 8399** • Bankstown Square **707 4888** • Blacktown **671 7722** • Brookvale **905 0441** • Bondi **387 1444** • Campbelltown **27 2199** • Chatswood Chase **411 1955** • Chullora **642 8922** • Gore Hill **439 5311** • Gosford **25 0235** • Hornsby **477 6633** • Hurstville **580 8622** • Kotara **56 2092** • Liverpool **600 9888** • Maitland **33 7866** • Miranda **525 2722** • Newcastle **61 1896** • North Ryde **878 3855** • Orange **618 400** • Parramatta **689 2188** • Penrith **32 3400** • Railway Square **211 3777** • Sydney City **267 9111** • Tamworth **66 1711** • Wollongong **28 3800** **ACT** • Belconnen **(06) 253 1785** • Fyshwick **280 4944** **VIC** • Ballarat **31 5433** • Bendigo **43 0388** • Box Hill **890 0699** • Coburg **383 4455** • Dandenong **794 9377** • East Brighton **592 2366** • Essendon **379 7444** • Footscray **689 2055** • Frankston **783 9144** • Geelong **232 711** • Melbourne City 399 Elizabeth St **326 6088** & 246 Bourke St **639 0396** • Richmond **428 1614** • Ringwood **879 5338** • Springvale **547 0522** **QLD** • Booval **282 6200** • Brisbane City **229 9377** •Buranda **391 6233** • Cairns **311 515** • Capalaba **245 2870** • Chermside **359 6255** • Rockhampton **27 9644** • Southport **32 9033** • Toowoomba **38 4300** • Townsville **72 5722** • Underwood **341 0844** • **SA** • Adelaide City **232 1200** • Beverley **347 1900** • Elizabeth **255 6099** • Enfield **260 6088** • St. Marys **277 8977** **WA** • Cannington **451 8666** • Fremantle **335 9733** • Perth City **481 3261** • Midland **250 1460** • Northbridge **328 6944** **TAS** • Hobart **31 0800** **NT** • Stuart Park **81 1977**

B1353

out the day. Lunch time, pill time, drink time, dinner time, etc, etc. Nurses have a schedule to keep. With a large number of residents to look after, and many are very difficult to manage because of their disabilities, it is not surprising the nurses and other staff are generally run off their feet trying to keep up with the schedule.

And it takes a very special kind of person to be a good nurse for the disabled, and I have met many very dedicated nurses.

Generally, though, Stephen has a lot of time on his hands, and his computer becomes his mate, his friend; some days his only friend, his constant companion - a companion that jumps at his command and does what he wants it to do - and it helps to fill in those very long hours with something interesting.

Programming for the Disabled

Programming for the disabled is an ongoing occupation. New programs come to mind, all programs need changing, become outdated. The operator's skill improves and time delays need shortening to keep up with their speed of operation. More difficult games are needed, and programs of wider and wider interest are needed. Stephen started with the Morse code and, because of his inability to transmit a readable Morse code signal, a combination Morse and scanning system had to be used.

As his ability at operating the switch improved, various methods of scanning and stepping were introduced to increase his acquisition of letters or words. It has been as much a learning exercise for the programmer as it has been for Stephen.

Conclusion

I attended a Caring Mothers meeting recently and was very surprised to learn of the number of brain-damaged people caused by car accidents in South Australia. We are told by the media of the number of deaths each year through car accidents, and that there have been more, or less, this time last year, but rarely do they publish the number of people who have been brain damaged because of these accidents. The hospitals operate and stitch them up and, when the wounds are healed, send them home to mother to look after them for the rest of their lives. There are 4000 of these brain-damaged people in South Australia alone.

Since just before Christmas, I have been training one of these lads in the use of a computer. He is a young man in his mid-20s, helpless and cannot talk. His name is Kelly. The only way he can operate the computer switch is with his foot.

Then there is Sue, a lovely girl. She is 29 years of age, with cerebral palsy, and cannot talk. She operates the computer switch with the back of her head. Her parents want to get her a printer so that Sue can write her life story.

I mentioned in the first part of this story that I was a member of the Technical Aid to the Disabled.

Technical Aid to the Disabled (TAD) is a voluntary organisation comprising a group of about 80 technical members (in South Australia) with varying skills, such as carpentry, mechanical/electrical engineering and electronics. We also have experts in the latest computer usage and programming.

When called upon for assistance, our members will design, construct, install, train and maintain any assisting device unavailable commercially, or will adapt existing aids, facilities and everyday items more specifically to meet the needs of the user. Individuals, family or friends may contact TAD directly as there is no referral necessary.

We work very closely with the Juliar Farr Centre, Royal Society for the Blind, regency Park Centre for Young Disabled, Royal Adelaide Hospital, Domiciliary,Care, Intellectually Disabled Services Council and many other organisations.

Our members are volunteers, and there is no charge for the time spent on a project, but the client is asked to meet the cost of materials used, and out-of-pocket expenses. In some cases a small administrative charge may be necessary.

It we can help, or you know of someone with a disability who would benefit from using our services, contact us on 261 2922 (in South Australia) of write to the Co-ordinator, Technical Aid to the Disabled, PO Box 112, Eastwood 5063.

(Corresponding information for NSW was published in January AR, *page 30. Consult the telephone directory in other states. Ed).* **ar**

EARLY AMATEUR RADIO IN AUSTRALIA - A CLARIFICATION

Colin MacKinnon VK2DYM
52-54 Mills Rd, Glenhaven 2156

In my article published in *AR* of May 1992 I stated that from 1899 to 1905 the Royal Australian Navy was in charge of wireless matters. To be strictly correct, it was still the Australian Squadron of the Royal Navy. Prior to Federation, in 1901, the various Australian states had their own military forces, including an assortment of small armed vessels, to protect their cargo ships and shoreline. The Federal Government took on this responsibility in 1901 but looked to the Royal Navy for ships and financial assistance. Between 1901 and 1914, political arguments continued about the expected contributions from states, commonwealth and the UK during which time the navy was called the Commonwealth Naval Forces. On 10 August 1914, this embryonic navy was placed under the control of the Royal Navy for the duration of the war, and by the conclusion of hostilities was officially the Royal Australian Navy.

The various Government Acts that I mentioned were not the inspiration of some clever Australian draft committee, but followed very closely the UK Acts for the same purpose of controlling wireless and telegraphy. Therefore they were influenced by events in the UK, including the PMG Monopoly, stifling of amateur experiments, the arguments with the Marconi Co, and the dislike of that company in many circles. In 1923 AWA was able to exert sufficient influence on the authorities to break away from the UK regulations which dictated a broadcast monopoly by the BBC. AWA and the broadcast entrepreneurs wanted and got the 'sealed set' system, with stiff royalty and licence payments. It failed miserably. In my article I told how a Perth radio club used its equipment to discover a number of illegal stations. Recent access to official records reveals that after the outbreak of war, suspicious telegrams were being sent from Perth to remote areas to the north and then transmitted by illegal wireless stations associated with German companies or friendly to the German cause. Germany had a number of colonies to our north equipped with powerful wireless stations capable of relaying the information to Germany and to ships at sea. The enemy's local & overseas colonial wireless stations were captured and destroyed early in the war. **ar**

The Horrors of CW

Julie Kentwell VK2XBR/VK2KSE/VK2ISI
34 Raymond Rd
SPRINGWOOD 2777

Back in 1982 I obtained a limited amateur ticket, VK2XBR. The event was not shown on national TV news broadcasts, nor did it make the front pages of sundry newspapers; in fact, it never even appeared in the sports section. Nonetheless, it was done.

WHY A HUMBLE LIMITED, NOT the mighty full call? Let's say I considered CW to be a boring, unwarranted imposition; antiquated, ridiculous, irrelevant and about as applicable to amateur radio as being able to type 20wpm in order to gain your certificate for HF. As for HF, I considered it to be full of old windbags who could talk for half an hour without actually saying anything, who had most likely never learned which end of the soldering iron was which, and who used only store-bought gear.

The lure of VHF/UHF had been strong in me since my teenage years in the early to mid-1960s; up there I would go, and damn HF.

Everything proceeded smoothly for nine years. I explored ATV, built the VK2RTS Sydney ATV repeater, built much VHF/UHF home-brew, including my famous collection of 415V three-phase-operated two metres and UHF gear. I still considered HF and CW to be the domain of fools.

Back in early 1973 I had started learning CW. I could do about 6wpm when, in unfortunate circumstances, my right arm was cut halfway through and, predictably, became purely ornamental (totally useless in fact!) for quite a long time thereafter.

So much for CW!

I never regained my interest in it, and that was that.

It should be mentioned that I had spent some years on 27MHz as "Batman" in the old pirate days, along with many others who are today's amateurs, and a few of these years were during a sunspot peak around 1979, so "been there, done that" applied to me in terms of world-wide DX on HF. During my years on amateur radio as VK2XBR I was never heard to say anything nice about CW; in fact, I rubbished the hell out of it.

There comes a time in one's life when some of one's pontifications rebound upon oneself with a crash. One is then in the ridiculous position of having a large black crow, complete with feathers, jammed into one's flapping mouth and being, unequivocally, told to eat it.

Yes folks, it happened to me!

In my ATV years I became friends with one Doug Chaffey VK2NBC. Doug eventually upgraded his licence to VK2GJE, subsequently VK2FC, and continued to play a leading role in the development of ATV activity. Doug had been VK2NBC since 1976, while anther chap, Ralph VK2ZRG, had been a limited for around 30 years; they made a deal: "I'll upgrade my theory if you upgrade your CW" and vice-versa. Well, it worked and they did. Ralph became VK2NR.

So far, so good.

The real problem came when, in late 1991, Doug pulled up stakes from Chester Hill and moved to Trangie. Yeah, I know, where the hell's Trangie? It's on the Mitchell Highway, about as far past Narromine as Narromine is past Dubbo. Ever tried to work Trangie from Springwood NSW on two metres? It's not on!

Now I find I have a problem. I want to keep contact with Doug on the bands and I can't. What to do?

Meanwhile, as all this was occurring, Ralph VK2NR had set up a system with Paul VK2JPL, at whose domicile resides the 2m section of the VK2RTS ATV repeater. This repeater is a complicated device using one callsign from two locations, capable of independent 2m and ATV operation as two repeaters or as one giant complex, too involved to describe here. Through the magic of amateur radio, not to mention some Ralph-brewed equipment, Ralph set up a system for slow-morse practice sessions (as if anyone would be idiotic enough to call 12 or 14wpm slow, although Doug does 45wpm), which sessions I, of course, ignored.

Until my problem!

On 13 November 1991 I sat down for the first time to try to copy Ralph's slow morse after an 18-year layoff. At 5wpm, two sessions of five minutes each, I made five and 10 errors. Fairly obviously, learning CW is like learning to ride a bicycle: once you master the art of falling off the damn thing, you never forget how it's done. Admittedly, 6wpm and above looked as though it had been mauled by a pack of wolves but, in less than one week, 6wpm was down to five errors over five minutes with just two sessions of practice. I passed my 5wpm send and receive on 1 December 1991.

Enter VK2KSE, King Size Ego.

The old Batman-days FT707 had some seven years worth of dust on it, but still worked. The glorious moment arrived and I had my first HF 80m QSO with Doug VK2FC on SSB. This probably won't interest you very much - if at all. What might interest you, though, is that the following evening I had a CW QSO with Doug. This event is regarded by me as a high spot in my chequered amateur radio career.

Why should this be?

Because, believe it or not, I had discovered the **enjoyment,** pure and simple, of goode olde steam-powered CW wireless. Now who would believe the man dubbed Mr Amateur Television by his peers, and a confirmed CW hater, would ever do that?

Not I, cried the little red hen!

Having achieved the ability to work Doug on 80 metres with my Terry VK2UX/Tim VK2ZTM inverted-V antenna, the story should have ended there. It doesn't!

My most important discovery so far is that CW is **fun!** No-one could have told me

this; I would have laughed aloud at the idea; I had to find out for myself.

So, undaunted by the rapidly increasing "diddley dahs", I soldiered on towards 10wpm, and this is where things started going a little funny. You would expect that, as you regularly practised your CW receiving, your error score would steadily drop. That sounds fair enough, doesn't it? Except that it's not what actually happened. Right from the word go, all my CW receive practice was done in a book and the number of errors made was entered in a chart. At this stage I was still doing only two nights a week and my error scores at a given CW speed varied wildly (and somewhat crazily!) from night to night. As an example, take my errors at 10wpm over a short period: 46, 22, 13, 31, 32, 27, 39, 44, 21, 29, 28. If there's any downward trend there, I can't find it.

A discussion with Terry VK2UX resulted in his suggestion that I use the VK2BWI morse practice sessions each evening. So I did, and the errors started to take on a pattern. Two charts were now kept - one for Ralph VK2NR's CW on VK2RTS (from which the error scores above were taken) and one for VK2BWI. We pick up, from Ralph's table, where we left off, which is the point where I started using VK2BWI and, from Ralph's 10wpm, we have errors of: 27, 25, 19, 5, 9, 12, 17, 6, 5, 2.

Now this is much more like it!

The proof of the pudding was indeed found in the consumption thereof. Terry's idea bore fruit very quickly; the secret was in a little CW practice every night.

One VK2BWI operator, Jim VK2NDI, supplied another valuable clue. He said, "When you're copying around 75 percent of the 10wpm segment, go to 12wpm and concentrate on the higher speeds." I heard him say this just one week before I went for my exam, which was my rotten luck, because it's good advice and worth knowing.

Jim, along with Cec Purvis from the WIA NSW Division, also made the point that when people learned CW for the Air Force they were given character speeds of around 18wpm. The gaps between these fast characters were gradually shortened as the speed increased. This way, operators learned the characters at the operative speed, right from the jump. Bear in mind that these blokes were learning CW for as much as four hours a day, weeks on end, and became very proficient very quickly.

Probably one of the most important facts you'll ever hear about learning CW was mentioned to me by Cec Purvis. Cec points out that CW is **sound.** If you learn to receive good CW (and there's plenty of the other sort around) then you will know yourself whether or not your own sending is good, just by the sound of it. Fairly obviously, you need not touch a key until you are well on the way in receiving.

I actually proved that. My first use of a Morse key in 18 years was when I did my 5wpm sending test, no errors and acclaimed as good CW, even though sent by a man with a mangled sending arm. The point is that if you learn good CW first, you will send good CW.

The great moment arrived, and on 1 March 1992 I passed 10wpm send and receive. Know something? It was easier than I thought it would be, even though I was a nervous wreck before the event and knocked over two cans of beer to settle myself down prior to having a go. I had to widen the gap on the key to stop my shaky hand from bouncing the key around, but out flowed the good CW and all was well. I had put in the work; I reaped the rewards while others at the same exam failed because they just hadn't been fair dinkum about putting in the effort. How serious were *they* about upgrading?

Which brings us to the crux of the matter.

I never did think that CW, any more than typing or public speaking, should be a requirement for HF operation; now, having done it, I am still firmly of that opinion. CW does absolutely nothing for your technical expertise, therefore it is irrelevant in terms of a licence based on "self-training, intercommunication and technical investigations carried out by duly authorised persons solely with a personal aim and without pecuniary interest". (RIB71, page 2, paragraph 3).

My friend Barry VK2FP is learning to play guitar. It will take him many years to play it as well as I do, since I have played for 24 years and practise every day. Do you play a musical instrument? If so, how well and how often. Is it fun?

You can learn CW, with just 10 minutes a day at it, in a few months. Anyone who can't spare that time is a ratbag or a liar. The big question is whether or not the time spent is worth the bother. For me, it was.

No doubt about it, the day will come when CW is no longer required. Until then, people will continue exercising their right of choice in pursuing it or not, as they see fit. Many of those who do their five or 10wpm and pass will put the CW key away, never to be used again. Others will keep it connected and ready for use because, like me, they are proud of their achievement and genuinely like CW, for the pure enjoyment of it. That's what it's all about; those HF operators who say "I had to do CW so you must" are coming the raw prawn. The choice is still yours; the goal and its rewards are solely up to you.

My thanks to Ralph VK2NR, Jim K2NDI, Rosco VK2BRC, Michael VK2BMW and Doug VK2FC for their help in getting me where I needed to go. Thanks also to Terry VK2UX and Cec Purvis for a helping hand.

May the Morse be with you!

ar

Sunday CW Net

The number of the Sunday CW Net, held on 31 May, was 984. Many CW operators may care to note that the 1000th Net should take place around September '92. Information can no doubt be obtained from the Sunday Net controllers.

G Lanyon VK2AGL

ar

Support the WIA in order to protect amateur radio frequencies

Intruder Watch

Gordon Loveday VK4KAL, Federal Intruder Watch Co-ordinator, "Aviemore", Rubyvale 4702

Freq	UTC	Date	Mode	Comments	X
7.002	1235dly	230392	A1A	V hrd more in winter	27
7014/16	1130+	2303	2xR7B	Possibly north of VK/ZL	21
14002	0630	030492	A3E	Foreign language B'caster	
14003	1015+	120492	N0N	Nil ID during listening time	3
14006	1210	090492	A3	Nil ID, QRN'd VK6HG	
14008	1517	190492	A3E	B'cast for no ID	
14015E	1233	110492	JE3	2-way tfc Chinese	
14032	1405	090492	J3E	B/c stn Indo or Malay lang	
14044	0930+	daily	2x LSB!	+ guard freq? 3 all told???	31
14045	1300	080492	J3E/U	R Nederland re B/C via R fone	6
14045/6	1039+	0704 dly	N0N	No ID in 3 hrs	20
14058+	0815+	2304 dly	P0N	+AC3 fax China??	42
14059+	0800+	210492	F1B	Unable to resolve fully	4
14060E	1108	060392	A1A	No further info	2
14070	1030+	010492	A1A	VBX coded tfc out mainly	25
14075	0830+	0204 dly	A1A	VRQ cq de VRQ MSG-SGO, LAF etc	33
14078	1205	140492	A1A	CK80 calling CQ fast CW	
14080	0330/35	0604	A1A	KFB XQ de KFB as PHL etc	11
14092	0955+	110492	A1A	RGT77 coded traffic	2
14095	0200/06	0604	A1A	VPC/CQ de VPC AS RGU etc	13
14100	0930+	040492	A1A	NZB coded tfc	27
14126	1030+	0704	F1B	Cont RTTY 2.5KHz shift	10
14210	0950mni	2303mni	A3E	Harm of 7105/f severe distort	25
14211/15	0935	2303mni	2x F1B	Both 250Hz shift, 3rd regis	28
14217.5	0700	240392	F1B/A1A	UMS + N0N when NIL tfc 250Hz	12
18075	1035	0304	A3E	B'cast stn, talk in English	2
18080	1208	100492	A3E	B'cast stn Chinese	10
21001	0500+	2603	N0N	A1A often hrd no ID	19
21031	0500/600	260392	F1B/A1A	MNR CW tfc to UUU UMS	33
21250	1009/+	0704	N0N	Some NS CW & R7B	11
21283.5	0705+	240392	A1A/F1B	UU UMS mostly 250Hz	47
21315	0500+	220492	A3E	B/c, faint music (7105 x 3)	10
21379	0500+	240492	A1A/F1B	UMS ID in A1A	2
24900	1143	2904	A3E	B'cast stn middle E, music	2
24925	1052	030492	J3E/L	Russian military stn	3
28183	2221	130492	F1B	50bd news in French	
28515	1149	200492	A3E	B'cast stn music	

Freqs 29500, 29565, 29575, 29595, 29605, 29625, 29675, 28595 are b'cast stns programming music and or talks - **all non-amateur origin,** all logged many times by VK6RO. Our winter is bringing an influx of CB stations from **all Asian** areas onto 28MHz band.

Observers this month: VKs 4BG, 4AKX, 4BHJ, 4BTW, 4BXC, 5TL, 4BXC, 5TL, 6AJ, 6RO, 6BWI, 7XR.

Support the advertisers who support *Amateur Radio* magazine

This space could be earning you money!

Advertising rates available from PO Box 300 Caulfield South, 3162

A Call to all Holders of a Novice Licence

Now you have joined the ranks of amateur radio, why not extend your activities?

The Wireless Institute of Australia (N.S.W. Division) conducts a Bridging Correspondence Course for the AOCP and LAOCP Examinations.

Throughout the Course, your papers are checked and commented upon to lead you to a successful conclusion.

For further details write to:

The Course Supervisor
WIA
PO Box 1066
Parramatta NSW 2124
(109 Wigram Street, Parramatta)
Phone: (02) 689 2417

11am to 2pm Monday to Friday
7 to 9pm Wednesday

PACKET RADIO PRIMER

by Dave Coomber G8UYZ and Martyn Croft G8NZU

ISBN 1 872309 09 7, first published *1991 by the Radio Society of Great Britain. 140 pages. Price UK£7.00.*

Reviewed by: Bruce R Kendall VK3WL

At last someone has written a book about packet radio that is readable. I say this because nearly everything I have read about this rapidly growing segment of our hobby is either written in "Packatese", or assumes the reader has some existing knowledge of computers or packet radio itself.

The preface to this easy reading book for the beginner openly states that "it is not intended it should be a standard reference manual, and some liberties have been taken with the deeper meaning of some of the more technical aspects of 'packeteering'".

Consisting of seven chapters and six appendices, this book covers most of the basic information required to get on the air using the AX25 protocol. Subjects such as the radio, the terminal node controller, the computer, software requirements, commands, operating procedures, mailboxes and bulletin boards are covered in a way that makes the newcomer feel comfortable. It goes on to discuss the various bulletin board software packages in use, and the basic commands one requires when logging on to these mail boxes.

Appendix 4 is on "PC Software" and details some of the TNC commands and features of YAPP v2.0, ProComm v2.41, and Paket v4.0.

The information contained in this book is about 99 per cent applicable to our local packet radio scene. There is, however, a few instances where some regulatory requirements peculiar to the UK are mentioned, such as the quaint British requirement for Morse code station identification when using packet radio transmissions. These few points aside, readers should have little difficulty i getting their packet stations up and running using the information contained within.

For those amateurs who have yet to experience this mode of communication, or for the frustrated packeteer who is having difficulty digesting the existing range of publications on this subject that are often not written for the raw beginner, this book is a must and I would suggest it as recommended reading.

The authors do recommend in their preface that for the more technically minded or more advanced operator, other publications such as the RSGB and ARRL handbooks be consulted in conjunction with or after reading the *Packet Radio Primer*.

Footnote: Other publications such as *Your Gateway to Packet Radio* by Stan Horzepa WA1LOU, and available from divisional bookshops, make good reading but do not, in the opinion of this reviewer, handle the basics quite as well as *Packet Radio Primer*. Both publications have their place, but the latter is recommended for those wishing to take their first steps in packet radio.

ar

MURPHY'S CORNER

In the article by Paul Kay VK4SY 'Homemade Spectrum Analyser' on pp24-26 of the June issue, the photographs are both upside down and transposed. They are reproduced correctly below. Apologies to Paul for the mixup.

Internal view of spectrum analyser - PSU is in top left-hand corner. Mitsumi tuner is in the middle, and the Ferris HF3000 board is on the right.

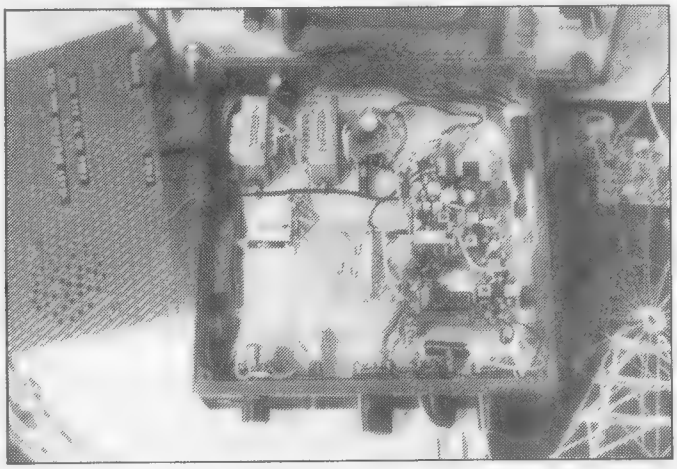

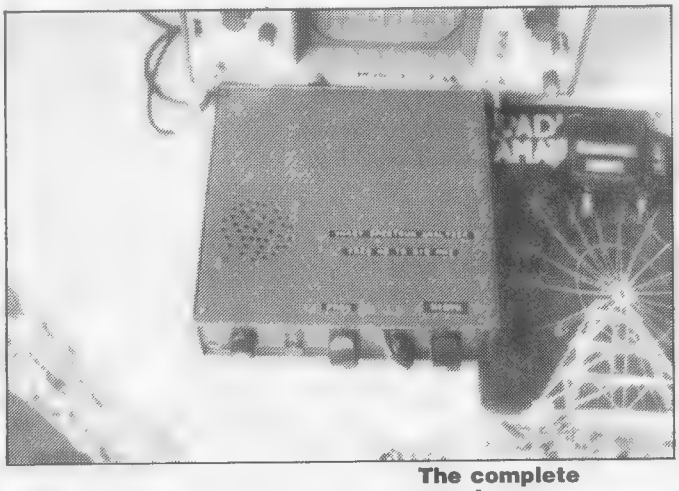

The complete spectrum analyser.

On p45 of the June issue, Dave Horsfall VK2KFU should have been described as Deputy Co-ordinator for the Sydney North region, not for the whole of NSW.

Awards

John Kelleher VK3DP Federal Awards Manager

The A4-DX group of the Royal Omani Amateur Radio Society will activate these DXpeditions:

i Zanzibar, 15-31 July - callsign 5H0ROA
ii Pemba, 21-27 July - callsign 5H0ROA/A
Bands: 10-80 including WARC bands
Mode: SSB/CW/Data
QSL: Via A47RS

Hervey Bay Award

Due to the unqualified success of the special event that this club operated in August 1991, celebrating the Whale Festival, we have been requested by the city of Hervey Bay's Whale Festival Committee to organise a 'sister' award for August 1992.

Feedback from all parts of the world have led us to believe the award itself was very well received, and it is our intention to keep this standard of award - although a different presentation - to the forefront once again.

We wish to advise all members of the amateur radio fraternity worldwide that the Hervey Bay Amateur Radio Club Inc will be activating the special event callsign VI4FOW (Festival of Whales) from 1-31 August 1992. The approximate frequencies will be: 3.794; 7.100; 14.235; 21.250; 28.495MHz, all + or - QRM, of course, and Australian novice frequencies will be activated as much as possible, as the bands permit.

The annual migration of these gentle giants, the humpback whales, into the warm, sheltered waters of Hervey Bay, enables them to rest and rear their young before continuing their southerly travels to the Antarctic regions. Visitors form many countries and all states of Australia arrive and marvel at the gentle nature of these magnificent creatures of the deep. Some lucky visitors have actually managed to 'pat' a whale from the sightseeing vessels.

An award and QSL card will be available for working the special event station, VI4FOW. Applications for the award may be directed to PO Box 829, Hervey Bay, Queensland 4655, Australia.

New Zealand Association of Radio Transmitters

This is the address for future applications for NZART awards. NZART PO Box 108, Gisborne 3801 New Zealand

Air Forces Amateur Radio Net

Special Event Station VI4AAF

The Air Forces Amateur Radio Net is congratulating our RAAF on its 71st anniversary with an A4 sized Special Event Award. Only one contact required. Forward QSL or copy of log entry to awards manager, Len VK2LEN QTHR with $3.00.

Shortwave listeners may apply for the award by submitting an extract of log with $3.00 to the awards manager.

You can find the Air Forces Amateur Radio Net on a Tuesday on 3.567MHz at 1000z and 3.610MHz at 1030Z, also on Tuesday. We are using the callsign on other frequencies. VI4AAF. **ar**

Contests

Presented by the relevant Contest Managers

1992 Remembrance Day Contest - Rules

This contest is held to commemorate those amateurs who died during WWII, and is designed to encourage friendly participation between all amateurs and to help in the improving of operating skills of all participants.

This contest is held annually during the weekend nearest 15 August, the date on which hostilities ceased in the south-west Pacific area.

The contest is preceded by a short opening address by a notable personality, which is transmitted on various WIA frequencies during the 15 minutes immediately prior to the commencement time of the contest. As part of this opening ceremony, a roll call of the names of those amateurs who paid the Supreme Sacrifice is read.

A perpetual trophy is awarded annually for competition between Divisions of the Wireless Institute of Australia. It is inscribed with the names of those Australian amateurs who made the Supreme Sacrifice, and so perpetuate their memory throughout amateur radio in Australia.

The name of the winning Division each year is also inscribed on the trophy and, in addition, the winning Division will receive a suitable certificate. The winning Division also holds the trophy for the next 12 months, after it is presented at the Annual Federal Convention.

Objectives

Amateurs in each VK call area will endeavour to contact other amateurs:

- in other VK call areas, P2 and ZL on bands 1.8-30MHz, except the 10, 18 and 24MHz bands;
- in any VK call area, including their own, P2 and ZL on bands above 52MHz, and as indicated in Rule 5.

Contest Period

0800 UTC Saturday 15 August to 0759 UTC

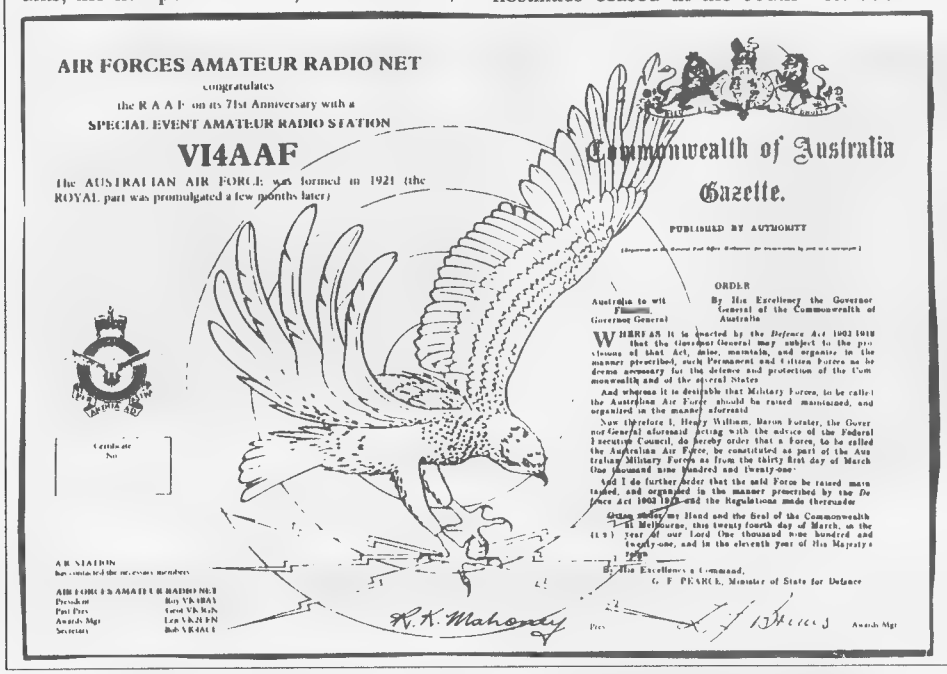

Sunday 16 August 1992. All Australian amateur stations are requested, as a mark of respect, to observe 15 minutes silence prior to the commencement of the contest. It is during this period that the opening ceremony broadcast, referred to above, will take place.

Rules

1. There will be two contest categories:
(a) High Frequency (HF) - for operation on bands below the 52MHz band
(b) Very High Frequency (VHF) - for operation on bands from 52MHz and upwards
2. In each category there will be three sections:
(a) Transmitting phone
(b) Transmitting CW
(c) Receiving
Modes applicable to each section are as follows:
(a) AM; FM; SSB; TV
(b) CW; RTTY
(c) Receive (a) or (b)
3. All Australian amateurs (VK callsigns) may enter the contest, whether their stations are fixed, portable or mobile. Members and non-members of the Wireless Institute of Australia are eligible for awards.
4. Cross Mode Operation is permitted. Cross Band Operation is not permitted except via a satellite repeater.
5. Scoring contacts.
(a) All contacts score one point
(b) On all bands a station in another call area may be contacted once on each band using each mode, ie you may work the same station on each band on phone, CW, RTTY and TV.
(c) On the bands 52MHz and above, the same station in any call area may be worked using any of the modes listed at intervals of not less than two hours since the previous same band/mode contact. However, the same station may be contacted repeatedly via satellite not more than once by each mode on each orbit.
(d) Acceptable logs for all entries must show a minimum of at least 10 valid contacts.
6. Multi-Operator Stations Are Not Permitted (except as in Rule 7), although log keepers are allowed. Only the licensed operator is allowed to make a contact under his/her own callsign. Should two or more operators wish to operate any particular station, each will be considered as a contestant and must submit a log under the individual callsign which applies to that operator.
7. Club Stations may be operated by more than one operator, but only one operator may operate at any time, ie no multi-transmission.
8. Ciphers - for a contact to be valid, serial numbers must be exchanged between stations making the contact. The serial number will comprise three figures commencing 001 for the first contact, and incremented by one for each successive contact. Should the serial number 999 be reached, the serial number will revert to 001.
9. Terrestrial Repeaters - contacts via terrestrial repeaters are not permitted for scoring purposes. Contacts may be arranged through a repeater. The practice of operating on repeater frequencies in simplex is not permitted.
10. Portable Operation - Log scores of operators located outside their allocated call district will be credited to that call area in which the operator takes place, eg VK5XY/2 - this score will be added to the VK2 Division scores.

Entries - a log of all contest contacts must be kept. This should be in the format as shown in the example.

A summary sheet for each category and section entered must be submitted to the RD Contest Co-ordinator showing the following information in this order as per the example shown:

Category (HF or VHF). Section (phone, CW or receiving). Callsign, name, address, total score.

Declaration: "I hereby certify that I have operated in accordance with the rules and spirit of the contest."

Signed: Date:

Only the summary sheets for each category/section entered are to be submitted. DO NOT send contest logs.

Sheets are to be forwarded to the RD Contest Co-ordinator, 2 Moss Crt, Kingsley, WA 6026. Envelopes are to be endorsed "Remembrance Day Contest" on the front outside.

Entries **must** be forwarded in time to reach the RDCC by Friday 2 October 1992. Although they are not required by the RDCC, the contest logs should be retained by contestants in case proof of claimed score is desired by the contest co-ordinator.

Determination of Winning Division

Scores by stations in VK0 are added to VK7.

Scores by VK9 stations are added to the mainland call area which is geographically nearest.

Scores claimed by P2 and ZL stations are not included in the scores of any VK call area.

The formula to be applied to determine the winning WIA Division is as follows:

Total Contacts per Division/Total Licences per Division times the Weighting Factor.

The Weighting Factor is calculated such that should each WIA Division perform equally as well in 1992 as in the past four years (averaged) the result would be a seven-way dead-heat.

Consequently, the most improved Division will win the trophy, and also earn a revised and lower weighting factor for the following year.

Receiving Section Rules

1. This section is open to all shortwave listeners in Australia, Papua New Guinea and New Zealand. No active transmitting station may enter this section.
2. Contest times and logging of stations on each band are as for transmitting.
3. Logs should be set out as per the example. It is not permissible to log a station calling CQ. The detail shown in the example must be recorded.
4. Scoring will be as per Rule 5 for transmitting, with other aspects of that same rule also applying.
5. Club stations may enter this section.

Example Transmitting Log

Remembrance Day Contest 1991
Callsign: VK1XXX Category: HF
Section: (1) Transmitting phone

Date Time (UTC)	Band (MHz)	Mode	Call	No Snt	No Red	Pts
0800	14	SSB	VK2QQ	001	002	1
0802	14	SSB	VK6LL	002	001	1
0805	14	SSB	VK5ANW	003	011	1
0807	14	SSB	ZL2AGQ	004	003	1
0809	14	SSB	VK4XX	005	007	1

Example Front Sheet

Remembrance Day Contest 1991
Category: HF
Section: (a) Transmitting phone
Callsign: VK1XXXName: Joe Brown
Address: PO Box 123, Farm Orchard, ACT 2611
Total Score
Declaration: I hereby certify that I have operated in accordance with the rules and spirit of the contest.
Signed: J Brown Date: 20.8.92

Example Receiving Log

Remembrance Day Contest
Name/SWL No: L30371 Category: HF
Section: (c) Receiving phone

Date Time (UTC)	Band (MHz)	Mode	Stn Calling	Stn Called	No Snt	No Red	Pts
0800	14	SSB	VK1XXX	VK2QQ	001	002	1
0802	14	SSB	VK1XXX	VK6LL	002	001	1
0805	14	SSB	VK5ANW	VK1XXX	011	003	1
0807	14	SSB	ZL2AGQ	VK1XXX	003	004	1
0809	14	SSB	VK7AL	VK2PS	007	010	1

12. **Disqualification.** Any station observed during the contest as constantly departing from the generally accepted codes of operating ethics may be disqualified.
13. **Awards** - certificates will be issued in accordance with the Guidelines for Certificate Issue Remembrance Day Contest.

Rules of the 1992 VK-ZL-Oceania DX Contest

For VK and ZL Stations

1.SSB: From 1000 UTC Saturday 3 October to 1000 UTC Sunday 4 October.

CW: From 1000 UTC Saturday 10 October to 1000 UTC Sunday 11 October.

2.Only open contact per mode per band is permitted. All bands except WARC bands may be used.

3.VK and ZL stations are permitted to contact each other **only** on 160 and 80 metres. VK to VK; ZL to ZL, and ZL to VK contacts are

permitted on these two bands.

4. **Cyphers:** Exchange a five or six-digit number composed of the RS(T) report, together with a three-digit number beginning at 001, and increasing by one for each QSO.

5. **Scoring:** Different points for contacts on different bands are as follows:

160 metres	20 points
80 metres	10 points
40 metres	5 points
20 metres	1 point
15 metres	2 points
10 metres	3 points

Final score will be the total QSO points multiplied by the total number of prefixes worked. The same prefix worked on a different band is counted. Note: K1, W1, AA1, N1 etc are all different prefixes. W1AAA/6 would count as W6, **not** W1.

6. **Logs**

(a)Separate logs for each band, please, and for SSB and CW.

(b)Show date, time in UTC, call of station contacted, cyphers sent and received

(c)Indicate clearly each new prefix worked (Underline, highlight or show in separate column, as in CQ WPX)

(d)State QSO points claimed for each band

(e) State number of prefixes claimed for each band.

Summary sheet to show ...

** Callsign, name and address

** Total points claimed on all bands

** Total prefixes claimed on all bands

** Total points claimed

** Declaration that the rules were observed.

SWL Section: As for transmitting section, **but ...**

** VKs must hear and log ZL or other stations (**No** VK stations)

** ZLs must hear and log VK or other stations (**No** ZL stations)

Post logs to: NZART Contest Manager, John Litten ZL1AAS, 146 Sandspit Rd, Howick 1705, New Zealand, to arrive by 15 December 1992.

Awards: Separate awards for SSB and CW.

(a) Special certificates to top scorers in each prefix area

(b)Special certificates to top scorers on each band

(c) Participation certificates to all entrants on request (one IRC for postage, please).

ar

Help stamp out stolen equipment - always include the serial number of your equipment in your hamad.

1992 John Moyle Field Day results

Section	Portable	Operator	Mode	Band	Callsign	
6 Hour	Home Stn	Multi Op	Phone	All band	A Minter SWL	790
6 Hour	Home Stn	Single Op	CW	HF	VK4EAW	88
6 Hour	Home Stn	Single Op	Phone	HF	VK6DE	26
					VK3PJB	13
					VK6BWI	3
6 Hour	Home Stn	Single Op	Phone	VHF/UHF	VK2BDT	16
6 Hour	Portable	Multi Op	Open mode	HF	VK2HZ	266 *
					VK4WIN	172
6 Hour	Portable	Multi Op	Phone	HF	VK4WIW	254 *
					VK1WI	140
6 Hour	Portable	Single Op	CW	HF	VK3EFO	22 *
6 Hour	Portable	Single Op	Open mode	All band	VK4BLE	290 *
6 Hour	Portable	Single Op	Phone	All band	VK4OE	286 *
6 Hour	Portable	Single Op	Phone	VHF/UHF	VK2ANK	366 *
					VK2DXV	102
					VK6BWI	20
24 Hour	Home Stn	Single Op	Open mode	All band	VK4EV	38
24 Hour	Home Stn	Single Op	Phone	All band	VK3DD	157
					VK4PJ	48
					VK5PMC	38
24 Hour	Home Stn	Single Op	Phone	HF	VK5CN	169
					VK3CAY	98
					VK7FD	36
24 Hour	Portable	Multi Op	Open mode	All band	VK4WIS	2556 *
					VK1ACA	2276 *
					VK6ANC	2188 *
					VK5ARC	1700
					VK2WG	1394
					VK3BML	944
					VK3ATL	678
					VK5BAR	448
					VK4WIT	182
24 Hour	Portable	Multi Op	Open mode	HF	VK6VS	138 *
24 Hour	Portable	Multi Op	Open mode	VHF/UHF	VK1WI	2416 *
24 Hour	Portable	Multi Op	Phone	All band	VK4IZ	4404 *
					VK4WIE	4254 *
					VK2FBK	2178 *
					VK3GH	1333
					VK3ANR	1099
					VI2FFG	1058
					VK5BP	212
24 Hour	Portable	Single Op	CW	HF	VK3XU	30 *
24 Hour	Portable	Single Op	Open mode	All band	VK5NW	646 *
24 Hour	Portable	Single Op	Open mode	HF	VK4OR	464 *
24 Hour	Portable	Single Op	Phone	VHF/UHF	VK5BW	408 *

Congratulations to the certificate winners (annotated by an asterisk). Well done. It was disappointing to note insufficient CW entries and scores to justify awarding the President's Trophy again this year. Hopefully more competition in the single op, portable, CW section next year.

The number of logs submitted does not show how the popularity of the contest has increased over the past few years. I was not able to enter myself but had the chance to listen around and there seemed a lot of activity. More logs and in particular comments will hopefully be submitted next year.

On that point next year the rules will only be changed for 50 MHz contacts. Scoring for 50 MHz will follow the VHF/UHF scores up to 499 km. For distances over 499 km, 50 MHz contacts will score as for HF contacts. A table of scores such as the following has been suggested by a few contestants with varying scores depending on distance. This table is for portable stations only. Home stations will score on a smaller scale that is yet to be designed.

0-49 km	50-99 km	100-149 km	150-199 km	200-499 km	> 499 km
2	10	20	30	50	2

50 MHz scoring was the only area of contention in all the comments received with the logs. So if you want to comment on the rules for next year, read last years rules again and drop me a line. Your input is much needed otherwise no other changes will be made.

Many stations failed to log any overseas contacts. The rules for the John Moyle do not exclude any operator from entering. Those stations that did log overseas contacts were noticeably ahead on scores for the contest.

Lets see if we can encourage more portable single operators next year. In the future I would like to phase out log submissions by home stations. Any comments!

Entrants are reminded that I will continue to make myself available on air on the weekend preceding the contest for any last minute enquiries.

See you all on air. Regards Philip VK1PJ. **ar**

The 16th West Australian Annual 3.5MHz CW & SSB Contests Transmitting & Receiving Rules

1.Duration:

CW Sunday 2 August.
SSB Sunday 6 September
Between the hours of 1030z and 1330z time, ie three operating hours for each contest.

2.Frequencies

All contacts to be made in the 3.5/3.7MHz band using frequency allocation applicable to your licence conditions.

3.Calling

Stations will call CQ WAA using the three times three technique; infringement of this rule by the use of long CQ calls may result in disqualification, as will pre-arranging of a QSO.

4.Scoring

Points for contacts are as follows:

Within Western Australia	5 points per contact
WA to all mainland eastern states	2 points per contact
WA to VK7	4 points per contact
WA to VK0 and overseas	8 points per contact

Three points per contact with WA stations only

5.Multipliers

A multiplier of two per WA shire worked will apply to the final score.
WA stations north of the 26th parallel only: an additional multiplier of 1.3 will apply per contact confirmed with stations south of the 26th parallel.

6.Contacts

Stations may be worked twice on each night, ie once between 1030z to 1300z and again between 1300z to 1330z; these contacts will count for points. Each time the contact for WA stations will take the form of an exchange of five characters comprising RST/RS and shire letters.
Eastern states and overseas stations will send RST/RS plus a running number starting at 001.

7. Logs

Contest logs to be set out on one side of a quarto or foolscap sheet with columns headed as below:

Time Z Claimed	Call Wkd	RST Out	RST In	Shire Letters	Shire Multiplier	Points
10.45	VK6—	59MV	59	PD	1	5
11.05	VK6—	56MV	56	RB	1	5
11.10	VK3—	55MV	55001	-	-	2
11.20	VK6—	59MV	59	MV	1	5
			Totals -	3	17	

Example - Final Score(south of 26th parallel) = 3 x 17 x 2 = 102 points
(north of 26th parallel) = 3 x 17 x 2 x 1.3 = 132.6 points.

Column 7 to be totalled at the foot of each page, and the running totals brought forward. The last page to contain the following summary: Total number points scored, input power, equipment and antennas used, along with comments on the contest in general. SWL participants score as above using the outgoing TX score.
All logs to be addressed to the WAA Contest Committee, 42 Kennedy Street, Melville WA 6156 and posted so as to reach us not later than 9 October for both contests. The results for all contests will be published in the December issue of *AR*.

Shire Identification Letters

1.	Albany Town	AT
2.	Albany	AL
3.	Armadale	AK
4.	Augusta/Margaret River	AM
5.	Bassendean	BA
6.	Bayswater	BW
7.	Beverley	BV
8.	Boddington	BO
9.	Boulder	BD
10.	Boyup Brook	BB
11.	Bridgetown/Greenbushes	BG
12.	Brookton	BK
13.	Broome	BE
14.	Broomehill	BH
15.	Belmont	BL
16.	Bruce Rock	BR
17.	Bunbury	BY
18.	Busselton	BN
19.	Canning	CA
20.	Capel	CL
21.	Carnamah	CH
22.	Carnarvon	CN
23.	Chapman Valley	CV
24.	Chittering	CI
25.	Claremont	CT
26.	Cockburn	CR
27.	Collie	CE
28.	Coolgardie	CG
29.	Coorow	CW
30.	Corrigin	CS
31.	Cottesloe	CO
32.	Cranbrook	CK
33.	Cuballing	CB
34.	Cue	CU
35.	Cunderdin	CD
36.	Dalwallinu	DU
37.	Dandaragan	DN
38.	Dardanup	DP
39.	Denmark	DK
40.	Donnybrook/Balingup	DB
41.	Dowerin	DR
42.	Dumbleyung	DG
43.	Dundas	DS
44.	East Fremantle	EF
45.	East Pilbara	EP
46.	Esperance	ES
47.	Exmouth	EH
48.	Fremantle	FM
49.	Gingin	GG
50.	Gnowangerup	GP
51.	Geraldton	GN
52.	Goomalling	GM
53.	Gosnells	GS
54.	Greenough	GR
55.	Halls Creek	HC
56.	Harvey	HY
57.	Irwin	IN
58.	Kalamunda	KA
59.	Kalgoorlie	KL
60.	Katanning	KG
61.	Kellerberrin.	KN
62.	Kent	KT
63.	Kojonup	KP
64.	Kondinin	KD
65.	Koorda	KO
66.	Kulin	KU
67.	Kwinana	KW
68.	Lake Grace	LG
69.	Laverton	LV
70.	Leonora	LA
71.	Mandurah	MB
72.	Manjimup	MP
73.	Meekatharra	MK
74.	Melville	MV
75.	Menzies	MZ
76.	Merredin	MD
77.	Mingenew	MW
78.	Moora	MA
79.	Morowa	MR
80.	Mosman	MS
81.	Mukinbudin	MU
82.	Mullewa	ME
83.	Mundaring	MG
84.	Murchison	MH
85.	Murray	MY
86.	Mt Magnet	MM
87.	Mt Marshall	ML
88.	Nannup	NP
89.	Narembeen	NN
90.	Narrogin	NG
91.	Narrogin Town	NT
92.	Nedlands	NL
93.	Northam	NM
94.	Northam Town	NO
95.	Northampton	NH
96.	Nungadin	NG
97.	Peppermint Grove	PG
98.	Perenjori	PJ
99.	Perth	PH
100.	Pingelly	PY
101.	Plantagenet	PT
102.	Port Hedland	PD
103.	Quairading	QG
104.	Ravensthorpe	RT
105.	Rockingham	RM
106.	Roebourne	RB
107.	Sandstone	SS
108.	Serpentine/Jarrahdale	SJ
109.	Shark Bay	SB
110.	South Perth	SP
111.	Stirling	ST
112.	Subiaco	SU
113.	Swan	SW
114.	Tambellup	TP
115.	Tammin	TM
116.	Three Springs	TS
117.	Toodyay	TY
118.	Trayning	TG
119.	Upper Gascoyne	UG
120.	Victoria Plains	VP
121.	Wagin	WN
122.	Wandering	WD
123.	Wanneroo	WO
124.	Waroona	WR
125.	West Arthur	WA
126.	Westonia	WS
127.	West Pilbara	WP
128.	Wickepin	WI
129.	Wiluna	WU
130.	Williams	WL
131.	Wongan/Ballidu	WB
132.	Woodantilling	WG
133.	Wyalkatchem	WY
134.	Wyndham East Kimberley	WE
135.	West Kimberley	WE
136.	Yalgoo	YO
137.	Yilgarn	YN
138.	York	YK

VHF/UHF – An expanding World

Eric Jamieson VK5LP PO Box 169, Meningie 5264

All times are UTC

Six Metres in Australia

Gil VK3AUI worked a few interesting stations recently; they included on 7/3 VK73AT, KC6RR and JAs; 26/3: C21BR; 27/3: 3D2AG; 30/3: XE1GE, 3D2AG; 31/3: KH6IAA. 1/4: XE3EB, 3D2AG; 8/4: ZL3TY; 14/4: FO5DR; 15/4: XE1GE, 3D2AG, XE1ABA, 3D2PO; 16/4: N6CW, K6STI, WA6BYA; 20/4: XE1GE; 22/4: 3D2AG; 25/4: 3D2AG, XE1GE; 26/4: XE1GE, XE1GRR; 27/4: K6FV/b, V73AT/b. 3/5: ZL3TY.

The month of May has been relatively quiet. JAs were rarely heard here at Meningie, and little to report between 38 and 50MHz. The same report comes from Adelaide and from VK5BC at Berri. However, there were a few contacts that should have been included last month. Jack T30JH had 108 6m contacts to VK from South Tarawa over a four-week period ending early April. The lucky recipient of the only contact to VK5 was Roger VK5NY at 2250 on 24/3. A message from Steve VK3OT says Jack will visit T30 again in August and hopefully those who heard him last time, but could not get through the QRM, will be more successful. QSL to Jack Haden, PO Box 299, Ryde, NSW 2112.

Last month I reported VK3OT as having worked 7Q7XX, but this second-hand report should have been checked by me as it is apparently not so - sorry Steve. However, 7Q7XX is QRV on six metres with 50 watts and a four-element Yagi and has been worked extensively by overseas stations.

John VK4ZJB has received his QSL from KC6RR and suggests others will receive theirs in due course, but it may take time as KC6RR was reported having made 28,000 contacts during his DXpedition!

Clarry VK5KL said he missed a few opportunities to work Europe by not noting the signs, but on 8/2 at 0740 he heard VK8GF working YU3ZV, so waited and worked his first Europeans, OZ1LO at 0825, SM7FJE at 1151 and ON4KST at 1153 after which propagation swung back to JAs. Clarry said the going was tough with his 20 watts and five-element Yagi at 20 feet, but he enjoyed the experience.

The VK2QF Report

Neville VK2QF has sent an interesting report, and for those of you who have wondered what he has worked, the following should tell you. Neville says six metres has yielded some exciting DX during the past eight months, particularly from Europe and the South Pacific. **New Short Path Record.** For this contact with Joel CU3/N6AMG on 27/11/91, VK2QF now holds the Australian 50MHz record with a distance of 19251.3km. That's really pushing out the DX frontiers, and the distance will not be easy to better, as there is not a lot of global space left beyond that distance.

New countries in bold print. 13/1/92: **OH2TI.** 29/1: DJ10J and heard IK. 8/2: YU3EA, IK2GSO, YU3ZV, IK1EGC, YU3OV, OZ4VV, OH3XA, IE1BJT, OH2BC, OH2TI, OH2AUK, OZ1BVW, **ON4ANT,** ON4GG, PA3VST and many others. 11/2: TI21NA, TI2HL. 12/2: YU3OV, YU3SE. 16/2: YU3ZV. 5/3: **KC6/W0RRY.** 6/3: KC6RR. 7/3: T3OJH, **C21BR,** V85PB. 8/3: V73AT, VS6BG, KC6RR. 9/3: AL7C, KL7HBK. 12/3: **JT1CO.** 13/3: JA8RC. 14/3: C21BR. 23/3: **3D2AG,** FO5DR, K6QXY, K6STI. 27/3: 3D2AG. 30/3: HH7PV, TG9AWS, N4RFN.

1/4: **W6JKV/HK0** - this was Jim's first QSO from HK0. 5/4: W6JKV/HK0, 3D2AG. 7/4: ZL2TPY on early Es at 1929. 13/4: V85PB, JA0, 1, 3, 4, 9, V85PB, VS6BG. (Neville said he asked Alex VS6BG to call XX9 on the phone, but the XX9 said he was entertaining and would not be using the radio for at least 24 hours!). 15/4: JA2BZY, 3D2AG, XE1ABA, 3D2PO, V31PC. 16/4: K6FV. 17/4: KC4SUS, N4XIH, 5W1KF. 18/4: XE1GE, YS1AG, V31PC. 19/4: V31PC. 20/4: **UZ0CWW,** V85PB. 21/4: V31PC, **C6ANY.** 25/4: JR8DAH. 26/4: XE1, V85, DU1, V63JC, K6. 30/4: JH1WHS. 3/5: JA1, 7, HL1EJ, 7K1GZP, JA2KSO.

It seems the DX largely disappeared in early May at VK2QF as it did in most of the country. Neville said he had been looking for ZK3TPY but was not very hopeful as the F2 seems to have moved further north. Neville also mentioned that Joel, whom he worked as CU3/N6AMG for his record contact, is now in hospital in a very serious condition following a bone marrow transplant. I am sure all amateurs will join with me in wishing Joel a successful operation and a speedy recovery.

Six Metres from Russia

A report from Yoshi JA1UT courtesy of Brenda VK3KT gives details of the 6m propagation test of 17-23 April from Khabarovsk City, eastern Russia, with the callsigns of RZ0CZZ and UZ0CWW. Both were club stations and there were 13 operators with assistance from JA1UT and JH4RUG. The stations worked split frequency - TX on 50.125, RX on 50.135 - using SSB and CW. They used an FT-655, TS680S, IC-551, HB9CV and a six-element Yagi.

The propagation test was promoted by the Friendship Amateur Radio Society, Khabarovsk, and carried out with support from the Khabarovsk Union of Friendship Society and the Radio Sport Club KAMIFUSEN Japan, with JA5RMR and JA0BEE.

The stations had 502 contacts, of which 472 were with JAs, 28 to VK, one to KG6 and one to UA0. The VK stations who made contact were 2BBR, 2QF, 3OT, 3AMZ, 4ABW, 4BRG, 4CCR, 4APG, 4DDC, 4FP, 4FNQ, 4KJL, 4KK, 4VV, 4UTT, 4ZAA, 4ZJR, 4ZNC, 6PA, 7ZMF and 8ZLX. (As I reported last month, the stations may be able to come to air once a month when their local TV station closes for several hours to allow adjustments to be made ... 5LP). You may send your QSL to JA1UT at 4-20-2 Nishi-Gotanda, Shinagawa, Tokyo, and Yoshi is prepared to forward them to Khabarovsk.

Six Metre News from the UK

Grenada James Jangdon J37AE is active from this island; QSL to James of the Philatelic Dept, Post Office, Sauters, Grenada. **Kuwait** Don 9K2WR and Bob 9K2ZR shared the same rig when making their first contacts at the end of March. By 20 March they had worked more than 25 countries. Bob 9K2ZR reports VK8RH is organising a CW beacon for 9K2 - frequency 50.041.5, callsign 9K2SIX, and planned to be on 24 hours. Permit to operate is now awaited. **Dominican Republic** HI8A was activated by Akito Nagi JA5DQH until the end of March. QSL to his home address of Box 73, Ishii Tokushima, 779-32, Japan. **Eire** QSL for EI2EFB is John Edmundson, Drumbuoy, Lifford, Co Donegal, Eire.

St Helena Chuck ZD7CRC is now on the island and ready to go on six metres. His direct address is Chuck Chalmers ZD7CRC, Box 126, St Helena, South Atlantic Ocean. However, as there is no airstrip on the island, mail by sea can take a considerable time! **DXpedition to UA2** The expedition to UA2 by Mike UL7GCC and Peter PA3EUI will operate from mid-July until sometime in August. The callsign is expected to be 4L2FM and the first grid locator probably KO04. No QSLs via bureau, but direct only to Peter vd Woude, Sparrendal 610, 3142LT Maassluis, Netherlands. **Turkey** Eric F1JKK commenced his 6m operations from Turkey on 23/4 using the callsign TA/F1JKK. QSL route appears to be Antoine F6FNU.

Contrary to what one might have expected, April was comparatively quiet in the UK. Ted Collins G4UPS reports stations worked or heard included ZS6XL, ZS9A, V51VHF, ZS6XJ, V51AT, SM7FJE, ZS6WB, ZS4S, 2E0AAX (one of the new UK allocations), FH4AA (Mayotte Is), DF7QY, CN8ST, PP5WL, G4SMC/8R1, CX1CCC, LU3EX. Best day was 24/4 from 1040 to 1504 with 4X1IF, PY5CC, 4N3SIX, I6CXD, YT3ET, IK4DRY, I4SJZ, IK4EWN, YU3AN, OE9FKI, ZP6CW, DL8MCG, DF7RG, YT2AQ, YT2SB (located in town of Oziec - he had to QRT due to heavy fighting!), 4N2CCY, OK3LG

being nine countries.

Geoff GJ4ICD reports the OD5 (Lebanon) beacon on 50.078 ran into some problems, but these have now been rectified. On 12/4 he worked 7P8SR at 559 for a GJ first and country number 121. Later the station was 5x9 on SSB. 15/4: News that TY1ABE (Benin) had worked Malta and southern France. 17/4: 1110 A22 at S5, followed by V51SIX and 4N/b. 19/4: FR5/b at S1. 20/5: 8R1 into Europe. Geoff confirms the big Es day on 24/4 with YU, PY5CC, FY/b, OK3LQ, OE5NEL, DLs, OK2PZW, ZP6CW, OK1MAC, V51SIX, ZS4S, ZS9A, ZS6AXT being available. Geoff has now worked 513 grid squares and mentions there are 17 squares to be worked in OK.

In my May 1992 notes I commented that the 350 stations worked in a day from the UK/Jersey area on 432MHz seemed an awful lot of stations, but Geoff assures me it was no misprint - there is much activity on that band in Europe, also widespread use of 1296MHz as well. It would seem then, that no matter when they turn on the rig there will always be stations to work. Interesting! I wonder if they have tried contacts via aircraft enhancement, or is there no need to bother?

The UK Six Metre Group

This group, of which I am now a member, is celebrating its 10th birthday. The group issues a quarterly bulletin; issue 33 for April runs to 52 pages, and included are lots of snippets of information relating to 6m activity and proposed activity on a world-wide basis. The following selections should be noted by you.

At the moment 6m operation from **Monaco** is strictly forbidden, so any amateur claiming to be operating from there is doing so illegally. Attempts are being made to reverse this situation. **Lebanon** OD5SK came on at the end of January. Samir runs 10 watts to a 1/4 wave vertical but has been widely heard in the UK. It is hoped a five-element beam will be constructed soon. **Switzerland** Swiss stations are permitted to operate only in non-TV hours, usually 0000 to 0500 UTC, which is not very helpful. Swiss authorities will decide at the end of 1992 the future of the 6m band. **Brunei** Peter V85PB will be at Brunei for three years. **Greenland** OX3CS and OX3LK are permanent residents and keen to make contacts. OX3LX is likely to be active during the northern summer, probably until 25/9, running 50 watts and a four-element beam. **Tanzania** 5H3RA is on six from square KI93 and will be there until spring 1993.

Estonia ES5MC, ES5PC and ES6QB appear to be the only 6m stations equipped for DX working. **Guatemala** Paul KA9KAI is seeking a /TG6 permit, but this may take six months. **Cyprus** G0KOM (ex ZC4MK) hopes to be QRV as ZC4MK for a couple of weeks at the end of August, and later to sign as 5B4. In October/November Adrian will activate VP8 (Falkland) for about four months. **US Virgin Islands** KP2A is the only operator at present on six from there, ad is usually on daily between 1200 and 1600. John specifically requests that 6m operators call him **only** if they need him for a new country. **Crete** SV1DH recently reported that a 6m beacon was planned for Crete and that permits may be issued for operation as SV5 and SV9.

Spain It appears one-year permits could be available to stations fulfilling rather stringent criteria, eg be a paid-up member of a local or international organisation; have had a full Class A licence for at least five years; during the past 10 years applicants must have participated in at least five international five national VHF/UHF competitions; no sanctions against the licensee in the past 10 years; the applicant must give details of places of operation, equipment used and what technical studies they wish to carry out and, at the end of the year, a log with observations of their activities must be submitted to enable consideration of a further one year's extension! So there!

Poland Despite all the rumours there are still no firm indications there will be any early operating from SP - this the latest news from SP4TKK. **Trinidad Island** - Natel DX Group is planning a DXpedition for eight weeks from early October 1992 and using the call of PY0T. Finally, 7P8SR from Lesotho is now on six, as also is Z21AFR from Zimbabwe. CX2IY and CX9DK are new stations on from Uruguay.

Repeat Contacts

Tanzania - Maza 5H3RA in KI93 warns stations he does not like to exchange grid squares or make repeat contacts, or be helped when a QRP station is calling him; so, beware! I note the UK Six Metre Group magazine carries a few comments about stations who repeatedly work DX stations. ZP6CW makes a plea for no more repeat contacts from stations who have already worked him. The question is being asked in the UK why UL7GCC needs to be worked three times a week, and the same two TU stations each time they appear on the band, apparently by the same stations. KP2A does not want any repeat contacts. A number of US operators are now looking for less powerful and more distant VK stations than those regularly available from the east coast of Australia, in particular looking to Western Australia.

It would appear the plea is circulating around the world. If you have already worked a station, must you do it again and again, to possibly exclude someone who has not worked the DX station? However, I must add - what should you do if a DX station is repeatedly calling CQ and not receiving replies? Operators who have already worked that station could surely be excused for giving a quick call and stating, say, "Fred, you are still S9 here in Brisbane/Sydney/Melbourne" as the case may be. This at least alerts the DX station that propagation still exists, and may keep him on the air for a longer period. All in all, one needs to weigh the consequences of calling again, as there will be times when it can be justified. It's a world-wide problem and one where there are no simple answers.

ARRL DXCC List

The time is drawing near when one or more VK stations may achieve DXCC on six metres during Cycle 22. A few years ago this would have been considered virtually impossible due to our geographic position on the globe. Much will depend upon whether the present low sunspot count stays down; a short peak may produce a surprise or two. Who knows? As a matter of interest the May 1992 issue of the ARRL *DXCC Countries List* shows there are 323 countries to be worked, and 54 deleted countries.

DXCC now being a consideration, a degree of interest has centred on the position of New Guinea in our total of countries confirmed. As a result of enquiries to me, I contacted the ARRL DXCC desk for an opinion and, as this has now arrived, the following is the official response, with some elaboration from me to give a better understanding.

Originally, New Guinea was divided into three countries: Dutch New Guinea to the west which, at the moment, is not our concern. The eastern portion was divided into two countries, the northern portion called the Territory of New guinea, with its dividing line meeting the coast at a point between Dona and Cape Ward Hunt. It included such coastal towns/settlements as Lae, Madang, Wewak etc. The southern portion was called Papua or Papua Territory, and included Port Moresby, Milne Bay, Buna etc. Up until 15 September 1975, for ARRL DXCC purposes, each was considered a country in its own right. From 16 September 1975 the two countries became Papua New Guinea - same land, but considered a new country with a new name.

Therefore, up until 15/9/75, if you worked someone in Lae you had one country, and another if you worked into Port Moresby. On and after 16/9/75, if you worked a station in Port Moresby or anywhere else in the amalgamated country, you scored a further country; therefore a possible total of three countries. The May 1992 ARRL DXCC list confirmed the above situation.

The above should set some readers scouring through their QSL cards. However, before I accept any claims for the Six Metre Standings List I would like to peruse the actual card or a photocopy of the card to enable me to decide if your claim can be supported geographically.

On Higher Bands

Ron VK3AFW says he continues to work Andrew VK7XR most mornings on 144.1 CW with readable signals. Andrew reported one tropo opening to VK3 in April, and on 25/4 he heard a brief opening to VK4 on two metres

and copied several repeaters, but no contacts were made.

On 9/5 from 0700, auroral activity was noted in VK3 on both six and two metres. Around midnight local time Norm VK3DUT worked VK7ZMF and several other stations on six metres, and VK3ELV in Wangaratta and VK7ZMF in Hobart on two metres SSB. VK3AZY and VK3DUQ were involved.

On 16/5, Ian VK1BG worked Phil VK3ELV at Wangaratta on 1296 at 5x4 both ways, for a distance of about 270km over the Great Divide at one of its highest points. This contact gave Ian his fourth VK3 on 1296. Contacts were also made on 144 and 432MHz. All these contacts were via aircraft enhancement. Others to use aircraft enhancement have been Eddie VK1VP to John VK3ZJC and Arie VK3AMZ. Lyle VK2BE has also worked VK3ZJC.

Closure

Two thoughts for the month: *Laughter is the sun that drives winter from the human face* and *With a good hand of credit cards, it's easy to go for broke - and make it.* Till next time - 73 from The Voice by the Lake.

ar

Pounding Brass

Gilbert Griffith VK3CQ – 7 Church St Bright 3741

This month I would like to feature some Morse code software which was sent to me by Ross Keatinge ZL1BNV in May. Gary Bold reviewed Ross' program in April for his column in *Break-In* (the New Zealand official journal) and Ross posted me the program, which I have been trying out.

You may remember the last program I tried out was VK3VR Geoff's RD Contest program. Well, this one can be used for contesting as well, but does not give the printouts and cover sheet as in the RD Contest program. It is very simple to operate but still has the following features:

*A memory for each F-key (to F10)

*A repeat character

*Automatic serial number incrementing for contesting.

*Serial number resetting and alteration with page up/down keys

*Speed change while transmitting with up/down arrow

*Status line giving last serial number and speed

*Help screen which does not interfere with sending

*And the following 'hot' keys:

Alt-D	toggle colour/mono display
Alt-H	Help screen
Alt-N	Setup IO Port
Alt-P	Pause on/off
Alt-S	Speaker on/off
Alt-W	Save messages, speed and serial to disk
Alt-X	Exit to DOS
ESC	Stop sending and clear the buffer.

The CW for the transmitter comes out of the parallel printer port on your computer, and the interface is very simple for modern rigs with positive keying (see figure 1). The interface fits inside a DB25 connector shell and is easily assembled from one's junk box by anyone with a soldering iron.

The program starts with Ross' copyright notice with 'Press any key to continue", followed by a blank screen with the status line at the top giving "Last S/N: 0. Press ALT H for help. Speed: 25", and pressing Alt-H gives a screen which has all the controls explained.

I loaded some Function key memories with 3 by 3CQ calls, my callsign, some serial number formats and repeats to see how they all worked, and found it was possible to keep pressing F-keys until the screen is full, at which time you started to lose messages as you tried to enter them. But a full screen represents a buffer of 1800 characters, and I make that about 10 minutes of buffer to the page at 30 words per minute! I entered up to 1800 characters in one F-key memory, but found I had wiped a previously recorded F-key, so I eventually settled for recording 10 F-key memories with 400 characters each, and yet I did not find the real limit of these memories. It may be possible to record 1800 characters in each F-key memory and save them to disk without losing anything. To enter text into a F-key memory you press Alt F1 and the status line tells you that you are currently entering text to message number 1, entering text terminates when you press enter. You can enter the hash sign (#) last and the message will repeat, or enter the code for a serial number with up to four digits which can be upgraded automatically, or ignored as required. Pressing the required F-key sends that particular message; pressing Shift and the F-key sends the message but does not update any serial numbers; and pressing ESC erases the screen and immediately stops sending. Of course, typing text normally at the keyboard starts filling the 1800 (one page) buffer and the computer operates the transmitter at the selected speed. You will be surprised how hard it is to keep up with a moderate sending speed unless your touch typing is very fast and accurate (which mine isn't).

Commonly used punctuation is provided, such as question mark, comma, full-stop and slash, with special characters of

-	(hyphen) sends BT,
=	(equals) sends AR
\	(back-slash) sends BK
+	(plus) sends SK
;	(semi-colon) sends KN.

I would have liked to have seen a few extras in the special character department such as $ @ & % ! etc, but it is difficult to find someone who knows some of those more obscure characters.

Ross has given me permission to distribute the program, so if you want a copy you can either send me your formatted disk with return post and packaging, or just $5 and your format requirement of 360kB or 1.2mB disk and I will supply the disk, p&p etc.

I am sorry if you do not have a computer and find all this talk of programs and such boring. I guess it is something we all need to adjust to and that is the main reason I am involved in computers - to try to stay one jump ahead of my kids! But also it is such a large and varied subject that I am glad I am not being left too far behind the times.

Does anyone know the official Morse characters for some of the obscure characters mentioned above?

I think it is generally agreed amongst amateurs that the exclamation mark should be – – – •. (OE), but did you know the following?

colon	— — — • • •	(OS)
apostrophe	• — — — — •	(JN)
brackets	— • — — • —	(KK)
(left— hand bracket used to be — • — — • (KN))		
underline	• • — — • —	(UK)
understood	• • • — •	(SN)
semi— colon	— • — • — •	(KR)
quotes	• — • • — •	(RR)
multiplication sign	— • • —	(X)
dollar sign	• • • — • • —	(SX)
paragraph	• — • — • •	(AL)

Correspondence and argument on the above subject will be enthusiastically entered into.

73, Gil VK3CQ

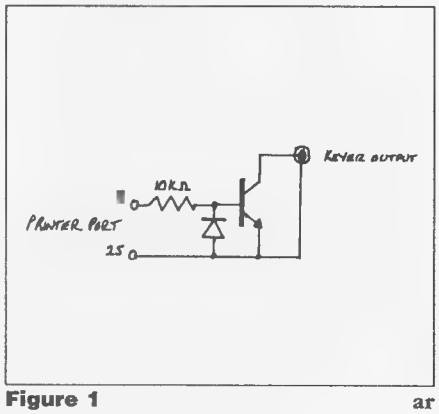

Figure 1 ar

AMSAT Australia

Bill Magnusson VK3JT – Packet VK3JT @ VK3BBS

National Co-ordinator
Graham Ratcliff VK5AGR
Please take note of the AMSAT information nets:
AMSAT AUSTRALIA net:
Control station VK5AGR
Check-ins commence at 0845z on Sunday nights
Bulletin commences at 0900z
Frequencies 3.685MHz or 7.064MHz. At present 7.064MHz is used.
AMSAT SW Pacific net:
2200z Saturday on 14.282MHz.

Experienced satellite users and newcomers alike are welcome on the nets. A large body of experience is on hand to answer queries. Listen to the WIA Divisional broadcasts for regular AMSAT information.

AMSAT Australia Newsletter and Computer Software:

Satellite users, whether experienced or newcomers, will benefit by subscribing to the AMSAT Australia newsletter and software service. The newsletter is published monthly by Graham VK5AGR. Subscription is $20 payable to AMSAT Australia, addressed as follows:

AMSAT Australia
GPO Box 2141
Adelaide 5001

The newsletter provides up-to-date information on all current and planned satellite activity. Graham also provides a first class software service for satellite users. New software is reviewed regularly in the newsletter.

KITSAT-A

Last month I outlined some details of this new satellite. More information is coming to hand as the launch date approaches.

KITSAT-A will transmit and receive 9600bps FSK signals using the AX.25 protocol. The downlink will also contain telemetry, experimental data, camera images and store and forward data. This will account for about 95 per cent of downlink time. The remaining five per cent will be taken up with DSPE (digital signal processing equipment). This will take the form of digital voice broadcasts and high-speed modulation experiments.

The satellite will be controlled from Korea. The control station call is HL0ENJ. The University of Surrey team will be acting in an advisory capacity.

KITSAT-A user frequencies: There will be two uplink frequencies. The primary uplink frequency will be 145.850MHz. The secondary uplink frequency will be 145.900MHz. There will be one downlink frequency. It will be 435.175MHz. These frequencies have been chosen after long deliberation to be least likely to cause interference to existing amateur radio satellites. (Unlike a couple of other recent examples).

The launch is planned for 23 July 1992. It will travel into orbit with another (commercial) micro-satellite and the main payload, which is called Topex/Poseidon, an oceanographic researcher. As I mentioned last month, the orbit will be very interesting and unique for an amateur radio satellite. It will be rather like a highly inclined version of the old Oscar-7 with long access times and slow transmit across the sky. The 66-degree inclination will take it way south of VK on occasions, giving good opportunities for VK0 contacts. I wonder if anyone's geared up down there?

No doubt KITSAT-A will be allocated an oscar number when it's safely in orbit and fully commissioned. Watch your local packet BBS for details as the launch date approaches.

Oscar-10 Keps

It looks like the approaches made to NASA by Amsat-NA have been successful in re-including Oscar-10 in the two-line keps list. The last set I downloaded, which were marked day 144, included a set for Oscar-10. Let's hope this continues as Oscar-10 is still a very workable satellite.

Oscar-13

Operating conditions for southern hemisphere stations should slowly improve over the next couple of years. The apogee is moving south at the rate of about 0.01 degree per day after a lengthy stay in the northern hemisphere. This rate will increase a bit as it comes further south. It is currently about 50 degrees north of the equator. For stations in VK6 there should already be some quite good windows into Europe, and this will gradually extend east over the next couple of years as the apogee moves further south. So it's time to dust off all that gear, reset the rotators and make the most of it. Remember, we've got only another three or four years before Oscar-13 re-enters, so we'll probably never see it back over the equator. But, during the time it has left, it should provide some good long-distance communications in the southern hemisphere.

Sail Race to the Moon

"In 1492 Columbus sailed the ocean blue". And, to commemorate this epoch-making event, another rather amazing event is to take place in 1994. Originally proposed to start in 1992, this race has attracted participants from Europe, USA and Japan. The idea is to design and build a spacecraft using 'solar sails' for propulsion and engage in a sailing race to the moon. The craft will be launched on an Arianne rocket. They will make use of the solar energy and their sails will be made like the radiometers we are all familiar with, spinning around in the sunlight on our science classroom window-sills. Their direction will be controlled by radio command through yaw, pitch and roll control surfaces on the sails. The first craft to send back a picture of the other side of the moon will be the winner. The combined Amsat-NA and World Space Foundation spacecraft will carry a colour camera similar to the one on Webersat Oscar-18. It will carry a beacon on 145.825MHz and a microwave communication package. If it is successful in reaching the moon it will have the capacity to go on to a close encounter with Mars some time later. This is pretty exciting, and will no doubt create quite a bit of interest as the launch time approaches.

Bob Arnold VK3ZBB

Satellite Activity for January to March 1992

1. Launches

The following launching announcements have been received:

Intl No	Satellite	Date	Launch Nation	Period min	Apg km	Prg km	Inc deg
1992 -							
005A	COSMOS 2177	Jan 29	CIS	11h16m	19150		64.5
005B	COSMOS 2178	Jan 29	CIS	11h16m	19150		64.5
005C	COSMOS 2179	Jan 29	CIS	11h16m	19150		64.5
006A	USA-78	Feb 10	USA				
007A	JERS-1	Feb 11	Japan	96.0	580	558	97.7
008a	COSMOS 2180	Feb 17	CIS	104.9	1028	980	82.9
009a	USA-79	FEB 23	USA	714.7	20318	19913	54.7
010a	SPRBIRD	FEB 26	ESA	631.3	35776	222	7.0
010b	ARABSAT-1C	Feb 26	ESA	632.4	35832	222	7.0
011a	MOLNIYA	Mar 04	CIS	11h42m	38998	629	62.9
012a	COSMOS 2181	Mar 09	CIS	105.0	1027	994	82.9
013a	GALAXY 5	Mar 14	USA	653.9	36135	1092	19.6

014a	SOYUZ TM-14	Mar 17	CIS
1963-047B	ATLAS/CENTAUR	Mar 20	
1971-096A	EXPLORER 45	Jan 10	
1975-033A	ARIABAT	Feb 11	
1976-085B	COSMOS 851	Mar 22	
1977-015A	COSMOS 895	Mar 22	
1978-024A	MOLNIYA 1-39	Mar 09	
1978-072A	MOLNIYA 1-41	Feb 08	
1980-051A	METEOR 1-30	Mar 01	
1990-038A	COSMOS 2075	Feb 20	
1990-058A	GAMMA	Feb 28	
1991-049A	COSMOS 2153	Mar 13	
1991-051E	MICROSAT-5	Jan 24	
1991-085A	COSMOS 2174	Jan 30	
1992-001A	COSMOS 2175	Mar 20	
1992-002A	STS-42	Jan 30	
1992-004A	PROGRESS M-11	Mar 13	
1992-014B	SOYUZ TM-14	Mar 19	

3. Notes

1992-014A SOYUZ TM-14 carried three cosmonauts and docked with the MIR space station on 19 March 1992.

Bob Arnold VK3ZBB

Education Notes

Brenda Edmonds VK3KT – WIA Federal Education Co-ordinator
PO Box 445 Blackburn 3130

I have recently had the opportunity to examine a copy of the 1991 *Proceedings of The ARRL National Educational Workshop*. This is the third year in which amateur radio recruiters, educators and others have been asked to submit papers for publication in the hope of assisting others to increase public awareness of amateur radio, teach amateur radio classes, integrate amateur radio into the formal classroom, or encourage and support newly licensed amateurs.

The 'booklet' runs to 254 A4 pages. Almost all of the 40+ contributions are from licensed amateurs. Many of them are 'How I do/did it' type, setting out in more or less detail the reasons for the activity organised, the preparations, processes and results, some evaluation and further suggestions. They range from a sample submission for funding to complete lesson plans or dissertations on the application of amateur radio to the Earth Science classroom, the Elementary School Guidance and Counselling Program or teacher training. Each paper is published unedited, so there is a wide range of styles and formats as well as varying levels of technical detail.

The most impressive part is the obvious enthusiasm and dedication of all the writers. Although admitting their own personal preferences, many of them have taken a larger view in the interests of encouraging a new generation of amateur operators, whether in primary school or among senior citizens. While acknowledging that the success rate in any group may not be more than five per cent overall, and that the attention span of teenagers is traditionally very limited, the programs have all 'worked' to some extent. (This is not surprising, I suppose. Would you write up one that was a miserable failure?). The authors have gone to a lot of trouble to make their contributions easy to follow, with samples of publicity material, individual class worksheets and a host of useful ideas. And it has all been produced specifically to allow others to evaluate the ideas and use them, if appropriate.

This is not a book I would say should be in every amateur's library, but it would be very good value for anyone wishing to introduce amateur radio to a group of students, or looking for ideas for new approaches. Divisions and clubs would find useful publicity suggestions, and many of the bright ideas will appeal to course teachers. (Why didn't I think of some of these years ago?). There is little effort required to translate the American situation to the Australian. As well, much of it makes entertaining light reading, mostly in short articles which can be read in only a few minutes.

The ARRL and the contributors are to be congratulated on this initiative.

I would very much like to know what is happening to amateur radio in Australian schools. Please drop me a note if you are running a school station or classes, or if there is a chance of integrating radio into classes in your school. Perhaps some of the ARRL Workshop papers could encourage more school activity.

My inspection copy from Stewart Electronics. RRP $24.00. This will be available from Divisional bookshops shortly.

ar

FTAC Notes

John Martin VK3ZJC FTAC Chairman

Records

Moss Kucerans VK7IK has broken his VK7 shortpath record on six metres by working PA0LSB on 8/2/92. The contact was CW and the distance is 17,053km.

John Bisgrove VK4KK (also better known to some of us at VK4ZJB) made two new VK4 6m records within the space of six minutes on 15 February. The first was a contact with Ken Willis G8VR (16,416km), and the second was to Paul Simons G4CCS (16,515km).

Data Base

The time for the next *Callbook* is getting very close, so any corrections or additions to the beacon and repeater lists would be much appreciated as soon as possible!

ar

Sign up a new WIA member today

ALARA

Jenny Adams VK3MDR – 70 Kangaroo Ground Rd, Wattle Glen 3096

Greetings to all once again. In May we had our annual general meeting and there have been a few changes. Firstly, a thank-you is in order to all who have retired from their positions, especially Bron VK3DYF who, after editing our newsletters for six years, takes on the job of secretary. Robyn VK3ENX has taken on the job of publicity, and I hope she enjoys the task as much as I have. Dorothy VK2DDB is our new editor. Congratulations to all those re-elected in their present positions - President Maria VK5BMT, Immediate Past President Jenny VK5ANW, Vice Presidents Christine VK5CTY and Judy VK3NYL, Treasurer/Souvenir Custodian Val VK4VR, Minute Secretary Christine VK5CTY, Awards Custodian Jessie VK3VAN, Historian/Contest Manager Marilyn VK3DMS, Librarian Kim VK3CL and Sponsorship Secretary Poppy VK6YF. Last, but not least, our State Representatives: VK1/2 Dorothy VK2DDB, VK3 Bron VK3DYF, VK4 Margaret VK4AOE, VK5/8 Meg VK5AOV, VK6 Poppy VK6YF and VK7 Helene VK7HD.

In July we celebrate our 17th birthday, with many states celebrating with a luncheon. Set aside a few hours on the fourth Saturday in July for our ALARA Birthday Activity Day, 0800 to 1200 on 3.588, 14.288, 21.188, 28.588 and 28.688. Hopefully the previous editor's rig will hear some activity this year.

Cheers for now.

ar

Pictured on Wednesday 9 October 1991, L to R: Christine VK5CTY, Marilly (sister of Maxi), Maxi DJ4YL, Irene Wilson, Denise VK5YL and Maria VK5BMT at a coffee house in the City of Adelaide.

Tell the advertiser you saw it in the WIA Amateur Radio Magazine!

Spotlight on SWLing

Robin Harwood VK7RH

As I write this, the situation in the former Yugoslavian republics has worsened. The United Nations has imposed tough economic and political sanctions on Serbia and Montenegro, to try to bring the senseless slaughter and misery to an end. So far there has not been any success. Although the shortwave senders of Radio Yugoslavia from Belgrade are situated in Bosnia-Herzgovina, it does not appear to have made any appreciable difference. Presumably they must be located in Serbian-controlled areas.

Croatia has now commenced broadcasting on shortwave and has been heard quite well in Australia. Listen on 9830 or on 21480kHz around 0600z for Radio Zagreb in Croatian. At approximately 0605z, there is a brief English news bulletin. Overseas DX sources report that these short English newscasts are heard at 0603, 0803, 1203, 1603 and 2103. A European monitor also stated that Radio Zagreb has an English newscast at 2220z on 6210. I have found 21480 provides the best signal, as it is on 24 hours a day. 9830 is fair, despite being a clear channel, and I suspect it is a low-powered sender. Belgrade is still being heard at 1130z in English on 21605, preceded by a Serbian program.

The Southern Cross DX Club Inc, which is based in Adelaide, has produced a receiver guide. This non-technical guide is a review of new and second-hand receivers currently available in Australia. It has been written and compiled by Stephen Newlyn VK5VKA. This nine-page pamphlet reviews most models, such as the Kenwood, Icom, Panasonic, Yaesu, Grundig and Sangean etc. It is well written, but isn't a technical review. It costs $2.50 and is available from the Southern Cross DX Club Inc, GPO Box 1487, Adelaide, SA 5001.

This month, as you are all no doubt aware, the 1992 Olympics commences in Barcleona, Spain. There is going to be an extensive coverage on shortwave from most of the international and national stations. The Spanish Foreign Radio in Madrid has been giving extensive coverage of the trials and difficulties the Spanish authorities have been encountering in organising these Games. Incidentally, the new title of the former Spanish Foreign Radio is the External Service of the Spanish National Radio. A 24-hour Spanish World Service wi' be operational by now. I'm hearing it best 0600z on 7105.

Well, that is all the news for this mc Until next time, the very best of 73 and listening.

Repeater Link

Will Mc Ghie 21 Waterloo Cr Lesmurdie 6076

On–Air Audio

The four diagrams as shown are real samples of amateur audio as seen on two metres FM. The vertical scale is deviation in kHz. The dotted lines show + and - 5kHz, and + and - 10kHz. The horizontal scale is time. These audio samples are input signals to a repeater. If the repeater has no audio processing, the output audio from the repeater will look and sound the same.

Figure 1 is the right peak deviation but with too much mic gain. Figure 2 is close enough to being correct. A peak deviation of 5kHz with the right mic gain (compression). Figure 3 has an unknown peak deviation with too little mic gain. Figure 4 has too much deviation, but the right mic gain.

There are many combinations of the four samples as shown, but they are representative of the wide variation in amateur audio signals. The problem for the repeater designer is to leave them as is, or to add some processing to iron out the differences. Simple audio processing can easily restrict the peak deviation to 5kHz, as shown in figure 2. The result with audio AGC would be that figures 3 and 4 could now look like the correct figure 2. However, figure 1 would suffer with increased audio compression, on top of its already excessive compression. There is always a compromise, but the result is better sounding audio.

To help relate the diagrams to what these samples sound like, here is a description of each.

Figure 1 sounds loud, with a loud audio background noise. If mobile, the vehicle's mechanical noise can be heard as loud as the operator's voice. Comments like, 'You must be driving a big four-wheel-drive truck with all the windows down' best describes this signal.

Figure 2 sounds comfortable, with the right mix of wanted audio and little background audio. An easy-on-the-ears signal.

Figure 3 is hard to understand. Your receive volume control is flat out, and you miss a lot of what is said. There is white noise on the audio, mixed with ignition noise if you are mobile. Chances are the next amateur signal blows you out the window.

Figure 4 is loud, but may be broken up due to the excessive deviation causing the repeat-r's mute, and/or your mute, to close on voice ıks. This type of audio is confusing, as it gıds strong with no noise, but breaks up. pıhe difference in audio level between fig-ackand figure 1 or 4, can be 20dB. Yes, 20dB. s 100 times more audio power. It is little wonder that some stations blow you out the window while others can't be heard.

It is important to understand that audio levels in an FM system do not relate to RF signal levels. Strong RF signals do not have loud audio simply because they are strong. The single most important adjustment in your FM transmitter for good audio is the mic gain. Correctly set for your voice and operating situation, this control will produce that easy-on-the-ear sound.

In a future article of 'Repeater Link' I will endeavour to describe the correct setting up of the mic gain and deviation controls. These two controls may appear to do the same thing, but they do not. Results from adjusting them can easily lead you into believing the correct outcome has been achieved, but an understanding of their functions is needed to set up an FM transmitter's audio.

Most FM transceivers produce good audio and never need adjusting, but this is not always the situation. If you receive consistently poor reports of your signal, don't only look at the RF side of things, or blame it on the repeater, it may be your transmitted audio.

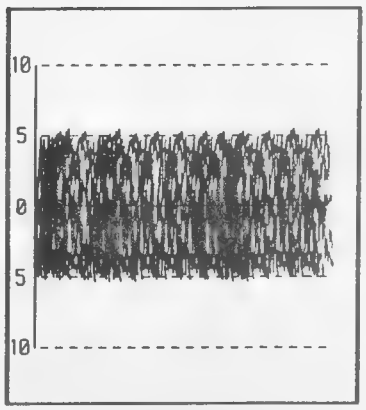

FIGURE 1

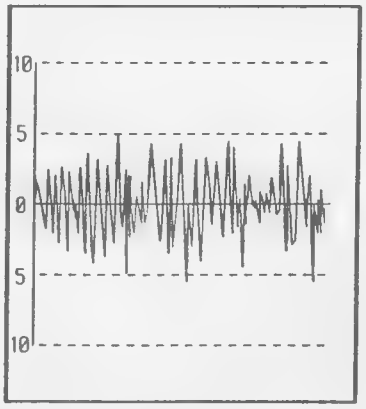

FIGURE 2

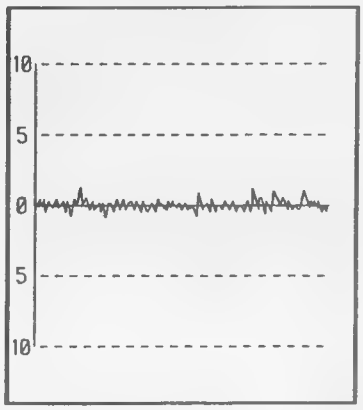

FIGURE 3

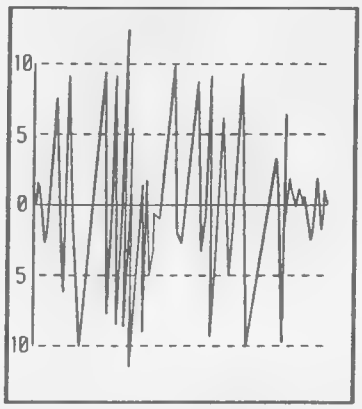

FIGURE 4

Club Corner

Summerland ARC - Minifest

Sunday 2 August is the date for the Summerland Amateur Radio Club's annual Minifest.

Bring and Buy stalls; heaps of treasures awaiting discovery; disposals; packet demo; trade display.

Maybe a foxhunt or two.

Refreshments available (BBQ, tea, coffee, drinks etc.

The venue is our clubrooms at Richmond Hill, via Lismore, commencing at 9.30am.

Directions on VK2RIC, VK2RBB or VK2AGH.

More information from John (066) 21 933, Ken (066) 24 4771, or Graeme (066) 85 1336. Packet news on VK2EA-2, VK2AGH-2, or VK2YDN-2, all via VK2RPL-1, 668900.

Make a note in your diary now - Sunday 2 August 1992, Minifest.

Graeme VK2GJ
Publicity Officer

QSLs from the WIA Collection

Ken Matchett VK3TL Hon Curator, WIA QSL Collection
4 Sunrise Hill Road, Montrose 3765, Ph: (03) 728 5350

Danzig - and what's on that old QSL card? Part II
YM4AF

This is a slightly older QSL than that of YM4ZO, and dates from October 1935. The TWR (Tone, strength, readability) code is still being used, although some operators at this time had already started to use the RST system. The operator has crossed out his callsign of YM4AF, thus turning his QSL into a SWL report, his licensed receiving call being DE2796Y. When transmitting, the operator, Max Brandstaedter (who was then living in Hitler Street) used the popular Hartley transmitter in which the anode and grid are connected to opposite ends of a parallel tuned circuit.

Input power was only 30 watts. Note the Nazi symbol of the swastika on Max's card. This became quite a common symbol on German QSL cards from about the mid-1930s, the Nazi Party having won the elections held in Danzig in 1933. The operator is using GMT rather than local time standard, as GMT was becoming increasingly used on the Continent by this time. On top of the card we read "Besucht das schoene Danzig" (Visit beautiful Danzig), one of the few tourist promotions that were just becoming popular, and which on many of today's QSL cards have given rise to many attractive pictorial renditions. The name of the very ornate building does not appear on the card. However, a search of Polish tourist literature led the writer to identify it as the Artus Mansion situated in what is called the Long Market in the middle of Gdansk. In late mediaeval times the building was the meeting place of rich merchants, and became a kind of closed club and stock exchange. The internal fittings were completely destroyed by bombing, but the interior has been fully restored by expert craftsmen. Just to the right of the picture can be seen a fountain. This is called the Neptune fountain and is the most famous one in Poland, Neptune signifying the dependence of the city upon the sea for its prosperity.

Author's Note

Much of the history of amateur radio can be gained by the study of the QSL cards of yesteryear. This column is only possible by reference to such cards in the WIA QSL Collection. We think it's worth preserving and for this reason appeal to **all** amateur radio operators and short wave listeners to give generously to the Collection. (It should be realised, however, that **all** QSLs are gratefully received whether they be pre-war or post-war). If you would like to help, please contact the writer of this series of articles. All contributions are acknowledged both in *AR* and by personal letter by the writer, who is the honorary curator of the Collection.

Thanks

The WIA (Vic Div) would like to express its thanks to the following who have kindly donated QSLs to the Collection. (Supplementary list).

Percy VK4CPA Bill ex VK6WY
Ron VK3QP Mike VK6HD
Stan VK3BSR (ex VK3ASB) Frank VK2QL
Owen VK1CC Reg ex VK1RF.

Also to the family and friends of the following "Silent Keys" (Supplementary list):

Russell Edwards VK3CZ
Fenton Sanderson VK6TS **ar**

Have you advised the WIA Executive Office of your new callsign? Use the form on the reverse of the Amateur Radio address flysheet

Divisional Notes

VK2 Notes

Tim Mills VK2ZTM

AGM

Perhaps on the second time. The re-scheduled NSW Division was advised in last month's notes for Sunday 28 June. It should be over by now. A report in later notes and in VK2WI weekly news.

July Trash & Treasure

This is set down for Sunday afternoon 26 July in the car park at Parramatta. Sellers from 1pm and buyers from 2pm. Good weather was on hand for the May event and saw a very good crowd, perhaps still waiting from the cancelled March event due to doubtful weather. Perhaps the next problem is going to be overcrowding, for there was a record number of both sellers and buyers in May. As always, keep an ear on the Divisional broadcasts for details.

August Exams

The next exams conducted by the NSW Division will be Sunday afternoon 30 August. Closing date for applications is 13 August. Venue is the library at the Parramatta office. Check page 3 in this *AR* for means of contacting the Divisional office.

VK2WI

Late in October this year, the morning VK2WI broadcast will move to a slightly earlier time slot of 10am. There will be no change to the present evening slot from 7.15pm. More details in later notes. A request last month for a replacement base station for 52.525 has been filled. Thank you. A solid state unit is now being crystalled up. The planned 6m repeater for VK2RWI is getting closer now that a transceiver and cavities have been sourced. The transmission on 12 metres will move soon from 24.91 to 24.95MHz. An alternative test may be conducted on 15 metres about 21.17MHz. These secondary transmissions are made when equipment is spare via a standby unit when not required for 80, 40 or 30 metres. The Great Lakes Amateur Radio Club has recently set up its 2m repeater VK2RGL on 7375 to automatically relay both the morning and evening broadcast from VK2WI. This is the 14th repeater used in broadcast presentation. Additional relays are still required in major regions. Club committees should soon receive a newsletter detailing various changes and upgrades scheduled for VK2WI, which may affect aspects of their relay involvement. It is time for the roster for announcers and engineers for the next quarter at VK2WI to be drawn up. Advise the office of unsuitable dates/times from the current crew, or if anybody wishes to join the roster, also contact the office by the usual means.

QSL Bureau

Please note recent changes to card handling. Check your club QSL officer for details, collect a sheet from the office, or listen to the periodic announcements on the broadcasts. Have you registered your card-handling methods with the Bureau, via the office? See card and report in AGM booklet.

VK3 Notes

Barry Wilton VK3XV

At last, some good news regarding our repeater sites!

Following the publication of our letter to DC&E in the May edition of this magazine, the Victorian Division Council produced another comprehensive submission which was forwarded to the assistant director, National Parks and Public Lands Division.

The final outcome of this matter is most favourable, and the following is an excerpt from an official letter received from DC&E:

"The nature of an organisation and the purpose for which a site is used dictate the policy adopted by the Department in establishing rent. A market rental applies to those tenants who are involved in operational or commercial activities or have exclusive use of a site. However, organisations primarily set up to provide a social, recreational or cultural service to the community, and which have limited means to generate revenue, are charged a nominal rental only.

Given that the Institute is a non-profit organisation established to provide facilities for radio amateurs and generates revenue primarily through members' subscriptions, it is considered that the Institute fits into this latter category and should, therefore, be regarded to be a community tenant for the purpose of rental determination. A copy of the Department's policy relating to community tenants is attached for your information.

The nominal rent charged for community tenants is currently set at $104 per annum, an amount covering Departmental costs. This amount will be payable for each tenure held. Regional staff have been advised to adjust accounts accordingly.

Please note that, where there are any situations where the Institute has entered into a commercial arrangement to sub-let its own facility to another organisation, a market rent would be payable in respect of that site."

It would certainly appear that success has been achieved on this front; however, we must closely monitor the situation as it develops regarding the privatisation of the repeater network utilised by Victorian Government services.

It is too early to predict the long-term effects of this privatisation policy; however, we will keep you well informed.

5/8 Wave

Jennifer Warrington VK5ANW

Council Update

Here, as promised, are the rest of the council portfolios and their holders:

Bob Allan VK5BJA
President, DoTC Liaison & SATAC Co-ord
John Highman VK5PJH Secretary
Bill Wardrop VK5AWM
Treasurer, Federal Councillor & Journal Editor
Peter Maddern VK5PRM
Building Supervisor & Auctioneer
Ian Watson VK5KIA
Alternate FC, WICEN Director and Publications Officer
Mark Spooner VK5ACQ
Program Organiser & ESC member
Rowland Bruce VK5OU
Past President, 5/8 Wave Columnist (and possibly Minutes Secretary)
Rob Gunnourie VK5FI
Clubs & Country Members' Representative
Chuck Waite VK5CQ
Membership Secretary (and possibly Examinations & Education Officer)
Alan Roocroft VK5ZN
QSL BURO Manager

One or two positions were still subject to negotiation at the last meeting when these were announced.

And yes, you did read that right, next month's column will be my last. I decided it was time to hand it on to someone else, preferably someone who is still on Council and nearer to the 'heart' of the Division. I am delighted that Rowland has agreed to take it on and keep it going. He proved last year that he is equal to the job. It was pure coincidence, but next month will be exactly 10 years since I started doing it.

Diary Dates

July 28General meeting, 7.45pm at the BGB.

As promised last month, here are the Examinations Information Sheets for Remote Area and Special Conditions Examinations, courtesy of Christine Taylor VK5CTY.

Information for Applicants for Amateur Exams

Special Conditions Examinations

From January 1992 the amateur examinations will all be conducted under the authority of the WIA Exam Service.

In each state there will be a list of official examiners which will be available from DoTC. These examiners will conduct exams at scheduled times and places (available from the examiner or the local Division of the WIA).

All examinations **must** have **two** official

examiners present at all times.

If, because of religious or work commitments, a candidate cannot attend a scheduled examination they may apply for an examination to be held on a day or at a time that is suitable.

Payment for the examination(s) will be at the time of application.

The examiner will apply for only the papers required and will arrange the time and place with the candidate when the papers arrive.

On the day of the examination the candidate will be able to obtain a provisional mark at the conclusion of the examination. The official mark and any appropriate forms will be forwarded to the candidate from the WIA Exam Service.

These results, along with any previously obtained qualifications, must be presented to the Department of Transport and Communication when applying for certificates or station licences.

Good luck!

Prepared by Christine Taylor VK5CTY.

Remote Areas

From January 1992 the amateur examinations will all be conducted under the authority of the WIA Exam Service.

In each state there will be a list of official examiners which will be available from DoTC. These examiners will conduct exams at scheduled times and places (available from the examiner or the local Division of the WIA).

Candidates from country areas who attend any of these scheduled examinations may apply for a private examination in their own area.

Many of the professional people in the local towns can be authorised to conduct an individual examination. A list of these people is also available from the Divisional Office.

These people may become 'once only' examiners.

When the candidates are ready to sit for any of the amateur examinations they should approach one of the people on the list, with this information to explain their request, and ask for assistance.

The examiners' applications, along with a covering letter from the candidate listing the examination(s) to be attempted, should be sent to the:

WIA Exam Service
PO Box 300
CAULFIELD 3162

This service will send back all the appropriate information to guide examiners and examinees.

Good luck!

Prepared by Christine Taylor VK5CTY.

VK6 Notes

Harry Atkinson VK6WZ

Two well-known VK6 operators are leaving - one to live in VK3, the other to spend about two years travelling Australia. Alan VK6AR will be a resident of Geelong some time this month. He and XYL Shirley will henceforth live close to family in Victoria, perhaps to the chagrin of Telecom! John VK6GU and XYL Hope are off to warmer climes initially, by taking the clockwise route around VK. Plans? To go places and renew friendships and to take at least two years doing it. Good luck to both parties.

Nick VK6ND is settling in well as BCO, and callbacks each week testify to this.

This is the time of year when many amateurs take off for touring ... and enjoy the security and peace of mind engendered by the Australian Travellers' Net on 14MHz, and Ross' 21MHz net for those unable to call in on 20 metres. For new licensees, the ATN operates on 14.116MHz seven days a week at 0300 Zulu, and the VK6DA net can be found on 21.185 seven days a week at 0100 Zulu.

The latter net has been welcomed by many travellers, especially those with novice calls. It fills a long-felt want.

ar

Silent Keys

Due to increasing space demands obituaries must be no longer than 200 words.

The WIA regrets to announce the recent passing of:

J H (Jack)	Early	VK2KQ
L (Len)	Pollack	VK2NM
A T (Allan)	Bosher	VK2TU
R T (Ray)	Pettigrew	VK3DO
IT	Adams	VK3OA
C (Clarice)	Adams	VK3UE
R (Reg)	Orr	VK4CV
DJ (Dave)	Richards	VK4UG
AR (Alan)	McKinnon	VK5AM

Raymond Thomas Pettigrew VK3DO (ex VK3PE)

Ray passed away suddenly on 10 May 1992. He had been an amateur since 1947 and worked for many years as an industrial electrician, and later at Preston Technical College as a lab assistant in the electrical and communications section until he retired.

He was very active as an amateur in the earlier years, and was a member of the Coburg 2m group from 1948-1950 using MOPAs and Superregen receivers.

After shifting to Templestowe, he had problems with the broadcast stations over the river from his location and his amateur radio activities were severely restricted. However, his interest in electronics in general did not diminish.

He will be greatly missed by his daughter Carol and her family as well as other relatives and many friends.

Allen Crowther VK3SM

Jack (John Henry) Early VK2KQ

A well known and respected member of both the post office and amateur radio, Jack passed away, aged 90, on Sunday 17 May in Port Macquarie Hospital.

Jack, who was born in Helensburgh, south of Sydney, was the son of a coal miner. He attended school in Wollongong, leaving at the age of 15 to take up a job at Clifton Post Office. Jack passed his Morse test of 20 words per minute in 1918, worked at many post offices in NSW, and finally became Postmaster at Toronto late in 1941. This office was upgraded by the creation of the RAAF base at Rathmines.

Jack was a 'top' morse operator, and right up to the time of his death, was an active ham radio operator.

He had close associations with the Westlakes Amateur Radio Club at Teralba as well as the Newcastle Morsecodians.

Frank Mike

Clarice Adams VK3UE

Clarice died on 26 May. She was first licensed in 1947 with the callsign VK3VB, and after her husband Stan died in 1977 took over his callsign VK3UE. Clarice was very active on the VK3UE net and made many friends here, interstate and New Zealand. Her cheery voice and interest in people will be sadly missed.

A remarkable lady has left us.

Barry Gauntlett VK3JB

Reg Orr VK4CV

It is with an acute sense of loss that I record the passing of Reg Orr in April 1992.

Reg will be sadly missed by his many friends among the amateur radio fraternity and the Royal Flying Doctor Service. Reg was a radio operator in the merchant navy during WW2. After a short stint with DCA, he joined the Queensland section of the RFDS in 1947. He was in his 43rd year of service as State Radio Supervisor when he retired in 1989. I was fortunate enough to be closely associated with him during the last 10 years of his working life.

Reg's amateur radio interests lay mainly in VHF, satellites and packet. A man of firm convictions, he called a spade a space, and was much admired for his traditional values. Vale Reg Orr VK4CV.

Nick Watling VK4YT **ar**

Over To You

All letters from members will be considered for publication but must be less than 300 words. The WIA accepts no responsibility for opinions expressed by correspondents.

Suggest, but not Direct

Reading through the IARU Administrative Council's Summary Record, Bandung 1991, I came across the following: "Concerning the improper use of the amateur bands". In respect to various other reports of non-amateur operation in amateur bands and amateur satellite bands Mr Owen VK3KI reminded the group that the ITU exists because of an agreement between countries in the form of a convention; that is, in so agreeing, the countries have not surrendered their sovereignty and have not given the ITU authority to function as an international spectrum policeman; and that every country reserves the right to act in accordance with its own best interests as each country may define for itself.

So, if a country wants to operate a transmitter for broadcasting in the amateur bands, or cares little about the proliferation of transmissions on the 10m band, that's it! Short of imposing economic sanctions or sending a gun-boat, we may just have to learn to live with 'other users' of the amateur bands. 73

Neil Penfold VK6NE
2 Moss Crt
Kingsley WA 6026

Titanic Anniversary Station Success

Single-handedly over a period of five days, using phone and Morse code on 80, 40, 20 and 15 metres, I answered hundreds of contacts and have already sent out the special QSL card to those operators who replied direct.

Those who made contact on the novice bands will have worked VK2MGY; "MGY", the callsign of the *Titanic*. But the card carries both calls, with a tick against the call worked. Among the contacts made were many from old radio pioneers and ship's operators, as well as those who had various connections with the *Titanic*.

Contact was also made with KA1BB, the USA Titanic station. Some of the interesting callers included the son of an operator at Cape Race, Newfoundland, who was on duty and heard the *Titanic's* CQD SOS call on 14 April 1912.

Two people, one a still-current VK, were taken aboard the ship by their parents prior to its sailing; one of these, when observing the gleaming copper antenna wires leading to the Marconi room, was bitten by the 'radio bug' at the tender age of eight, and has been hooked ever since.

The highlight was perhaps contact with VO1CQD, the operator at Cape Race telegraph station. Historians will remember that operator Phillips was so busy working Cape Race with private messages from passengers, he ignored the final and crucial ice warning from the *Californian*. This station obtained the use of the suffix CQD after it ceased to be an accepted distress call.

All operators who QSL'ed direct (or via manager VK2DZF) will have received their cards by 25 May. All other cards will be held until 15 July 1992, after which they will be sent via the NSW Bureau.

Ian C Griggs VK2WR
88 Excelsior Ave
Castle Hill 2154

BARC Picnic

As a member of the Barossa Amateur Radio Club it was with regret that I read in the 5/8 Wave column in the May issue of *AR* Jenny Warrington's 'attack' on the BARC's Radio Picnic Day which was held on the same day as Walk Against Want. Particularly offensive was the bold type telling 'picnic organisers' to note the date for next year's event.

Firstly, the red faces must have been on her behalf because they did not contact us to tell us of the problem. Secondly, I do not feel the WIA should be letting us know of the plans for next year through *Amateur Radio* magazine. At no stage has Jenny or the WIA had the decency to telephone or write to the BARC advising us of the matter at hand.

The BARC will be holding the next Mt Pleasant picnic on 28 March 1993, the same date as the Walk Against Want. This was planned before I read of the Walk Against Want date in the May *AR*.

We are committed to this date as it is the only time Mt Pleasant is available; in fact, the date for the Mt Pleasant Picnic Day is set with the Showgrounds committee for quite a few years to come (the week after the Mt Pleasant Show). The weeks before the Mt Pleasant Show are permanently booked for cricket and, from April on, are booked for football.

I feel our picnic day could not be totally blamed for poor response to the Walk Against Want. We had 450 people (amateurs and CBers) turn up at Mt Pleasant; this still leaves many hundreds more who could have volunteered to help out if they had been so inclined. Maybe not that many people are interested in WICEN activities.

Steve Johnston VK5ZNJ
Box 67 Elizabeth 5112

(Jenny who saw this letter prior to publication, has declined to comment. Ed)

QSL Cards

I refer to the SWL QSLs article in the "Over to You" column of April '92 issue of *AR*.

In response to that letter, I would like to offer some of my own figures. I work DX regularly on 20m, 100 per cent CW. I QSL 100 per cent by prior arrangement and reply 100 per cent to SWLs etc, but not to those who want me to pay the expenses both ways.

Working Stations

1. Of those to which I QSL, about 18 per cent reply.
2. Of that 18 per cent, about 95 per cent of them wait until they receive my card first.
3. Via the Bureau or Direct the results are similar.
4. A very small percentage of those who reply direct will put extra cards in the envelope to be redirected to other parts of Australia. *Usually these are okay in the International Callbook, too.*

Working Other VKs

1. Better than 90 per cent return rate.
2. Again the great majority wait to get that card first.

While I have reservations about someone who would send 200 cards and not receive a single reply, I do appreciate that SWLs would probably find it more difficult to get a reply than we do. However, as a WIA member who attends branch meetings regularly, I can assure you we do see cards that are SWL related going through our QSL bureau on a regular basis.

While I do accept there is a problem with QSLs, I don't accept that Australia is the only trouble-spot, and will never accept that we are as bad as that letter made us out to be.

Clarrie Hilder VK7HC
5 Speed St
Cooee 7320

De-regulation of Licence Conditions

I am not one who knocks back things which are the result of change, and am happy to go with progress, but what makes me angry is that full-call licence holders again did not get any more privileges.

I do not object to an increase of output power for novice and combined licence holders. **But, how about an increase of power for full-call licence holders?**

We also have the right to align with commonly available 'commercial equipment'. Lots of countries have output power from 750 watts to 1.5kW for full-call holders. Only Australia and some other conservative countries are still behind.

I worked very hard to get my full call, probably like many others, and I think **now is the time** for full-call holders to also get something for nothing.

Thomas Knopp VK3GTK
PO Box 454
Noble Park 3174

A New Name for the WIA

The *Wireless Institute of Australia,* as a name, has the virtue of simplicity, but the disadvantage of antiquity. It fails to convey to newcomers and the public just what we're about.

'Wireless' has fallen so far from any sort of currency in everyday language as to be meaningless to all but 'the cognoscenti'. Among young people, the term is wholly eschewed, if not derided. This reflects very poorly on our image, particularly on first impressions which, as is well recognised, are most important.

In this area, the word *wireless* is an anachronism - 'something placed or occurring out of its proper time' (Macquarie Dictionary).

We need a name which conveys what we are and what the organisation is about. But we ought not cast aside *holus-bolus* our organisation's proud past and honourable traditions - for the Institute is, after all, the oldest amateur radio organisation in the world.

I believe the answer is a simple one; I propose the new name be the

Amateur Radio Institute of Australia (ARIA)

Amateur Radio states *precisely* what the members' interests are, and whom the organisation represents. The term 'amateur radio' could, should and would enjoy a wider currency, and with more positive connotations than does the term 'wireless'.

Retaining 'Institute of Australia' retains a link with our current name and its heritage.

I note current moves by the ARRL to change its name to 'The American Amateur Radio League'.

Ladies and gentlemen of the Institute, what do you think?

Roger Harrison VK2ZTB
3/3 Rosemont Ave
Woollahra 2025 **ar**

Stolen Equipment

Stolen from Peter Corkeron VK2AGB on 28 May, one Yaesu FT-2700RH dual-band transceiver, serial number 5L121354. Contact Peter 018 412 629 or Sutherland Police.

Stolen from Dick Smith Electronics at Parramatta on 13 May, one Yaesu FT-757GX II serial number IL590102. Notify DSE or police.

Stolen from R Clark VK2KSN, 'Walnut Grove', Morga Rd, Canowindra 2804 on 24 April, one Sawtron 999 UHF CB transceiver, serial number 203026.

Baloon Launch QSLs

A reminder is given to all those hoping to acquire "QSL Cards" and certificates for the recent balloon launch to send contact details and $5.00 to the EMDRC, PO Box 87 Mitcham Vic. Certificates and cards are prepared and await verification of contacts.

Jeff Daly VK3MFR

Morseword No 64

Solution Page 56

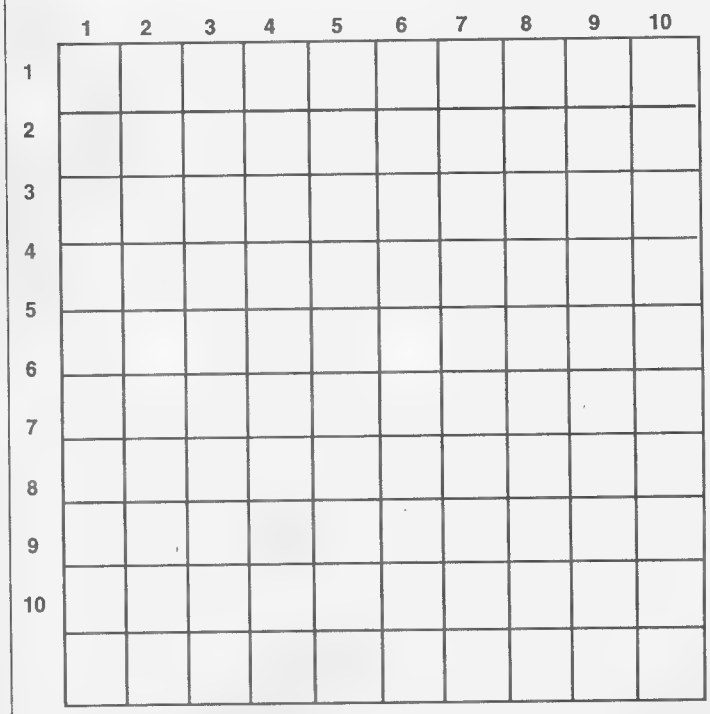

Across:
1 Lawn
2 Young Stephen
3 Regretted
4 Listen
5 Remain
6 Aden's country
7 Roused
8 Young Harold
9 Latvia's capital
10 Dregs

Down:
1 Bottom
2 Dog
3 Underwater craft
4 Sheep
5 Snuggeries
6 Mist
7 Oath
8 Touch
9 Mouth
10 Part of a blind

© Audrey Ryan 1992

A Support for the Rotary Beam

J A Gazard VK5JG
2 Corbin Rd
Menindie Gardens 5081

(with apologies to the author for the unconventional placement of his article, caused by a last-minute hitch – Ed)

The simplest and cheapest structure for supporting a rotary beam is a guyed pole but, although the guyed pole is structurally sound, this type is seldom used. The reasons for this are:

(1) that to install the beam the structure has to be climbed, and this cannot easily be done with a guyed pole, and

(2) the beam, assembled on the ground, has to be hauled up to the pole top, and the guys prevent this.

In discussion with a friend, it was considered that these difficulties could be overcome if the pole was telescoped into a borehole in the ground so the top was about two metres above ground in the low position. The beam array could then be installed at ground level, and the pole could be winched up into its elevated position. The advantages of this scheme would be:

(1)
The much greater cost and difficulty of erecting a tower or similar support would be avoided.

(2)
All installation, adjustment and repair of the beam would be done on the ground, and no climbing would be necessary.

This idea seemed feasible to me and I decided as an experimental check to set up a pole support for a 28MHz quad in this way. The pole chosen was a steel tube 50.8mm od, 1.6mm wall thickness (2" and 1/16") which comes in lengths of six metres. It was passed through and supported vertically by a 450mm long sleeve which was held two metres above the borehole by an angle iron tripod (see fig 1). A 2" G I water pipe has exactly the right dimension (50.9mm) for the sleeve, and the tripod was formed from available 38 x 38 x 5mm angle iron.

With this arrangement the top wire of the quad was 10 metres above ground, and the borehole depth needed was four metres. The hole was bored with a 6" posthole borer with extensions, and the bore was cased with a 4" plastic drainpipe. It is essential the sleeve should be exactly in line with the borehole, and this was achieved as follows. The pole was wrapped with a spiral of 1/2" rope and fitted into the free casting which was then lowered into the borehole and set vertically with a spirit level.

The borehole was back-filled around the casing by pouring dry sand. The tripod was then lowered onto the pole so the tripod feet, with holding down bolts fitted, came just over pre-drilled foundation bores. These bores were then filled with concrete to the level of the tripod feet.

A thrust bearing for the pole was fitted to the bottom of the sleeve. This swung away from the centre line so the pole could be raised or lowered and was swung back under the fully raised pole. A fixed collar was fixed to the top of the pole with a loose collar set just above to take the guys. The pole with the quad attached was rotated by hand. A simple home-brew winch was used to raise the pole. This could be done in less than half a minute.

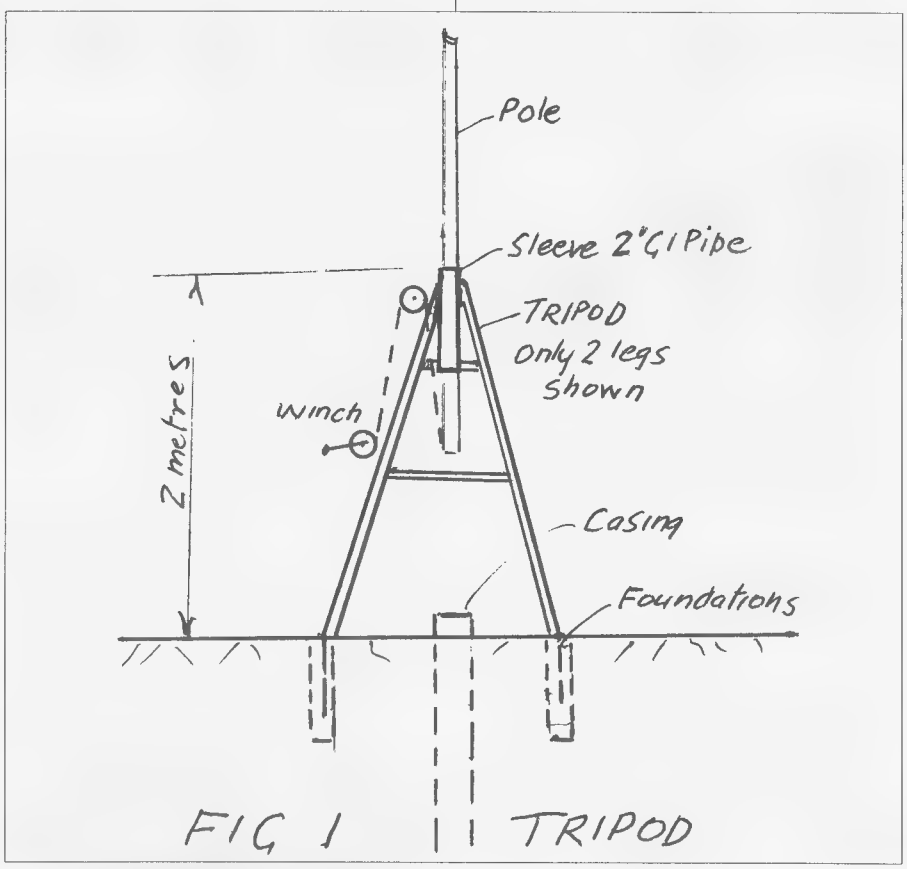

The work was carried out single-handed and, except for the bore, was not difficult. I had not expected any difficulty in boring to four metres, as friends in other suburbs had put down drainage bores to 10 metres, but this bore was very difficult. Although it was done at the end of summer, ground water entered the hole below two metres, which made it difficult to bring up the spoil, and then, at about three metres, the clay, which had been compressed by the weight of the overburden for a million years or more, became very hard, and resembled soft rock. It did not soften when wet, and four hours of boring was needed to complete the last metre. A different type of borer might have been more successful.

The mast has met all expectations in use. It carried the quad at full height for two years and showed no signs of strain in strong winds. It now supports a 2m 'Slim Jim' and the centre of a down-sloping dipole at 10 metres with a drop-in extension, and in this use needs no guys. The cost of the pole itself was $25-50 and the total cost of materials, including guys, was about $65.

This mast was experimental, and its height was suitable only for a 28MHz quad. For general use it would have to be about two metres higher, and a larger steel tube would be preferred. There is a tube made by Tubemakers Aust which meets these requirements. It is styled 'Gal Tube Plus'. It is galvanised and has an od of 60.3mm, and a wall thickness of 2.3mm. It comes in lengths of 6.5 metres, costs $6 per metre and is calculated to be twice as strong as the 50.8mm tube. A length of 2.5 metres joined to the 6.5 metres, either by a steel insert or by welding would result in a pole with height of 10.5 metres, or about 35 feet, which is ideal for supporting a rotary beam. The bore depth in this case would be 7.5 metres.

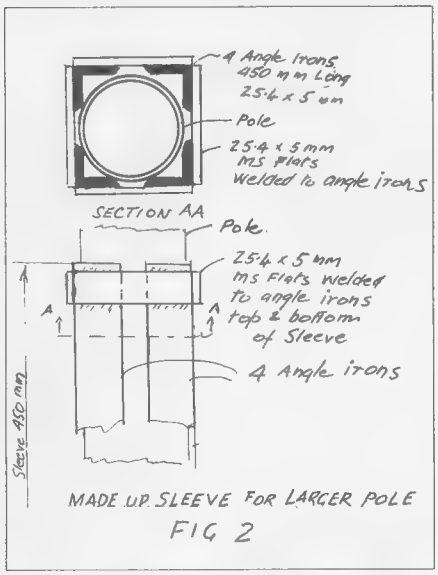

MADE UP SLEEVE FOR LARGER POLE
FIG 2

There is no ready-made sleeve available to fit this larger tube, but one can be made by setting up four angle irons as shown in fig 2. As this sleeve is four-sided, the tripod could be replaced by a four-legged structure, possibly using 3/4" pipe for the legs. A beam rotator could be fixed to the bottom of the thrust bearing if the support legs were designed to fit this in.

I estimate the project using the stronger and taller mast could be carried out for a materials cost of about $100 – a fraction of the cost of a tower. I would suggest that anyone proposing to carry out a similar project should complete the borehole before acquiring any material. You may strike rock!

The above is only a general description of the project. I would be happy to supply any further information such as sketches of the thrust bearing or winch that I used to anyone proposing to erect a pole.

ar

AMERITRON

AL811 600W PEP
HF Linear amplifier

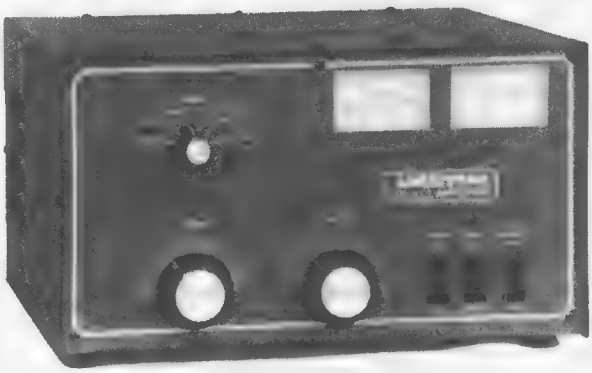

Shades of the magnificient past! Remember the days when a power amplfier looked like it meant business and was heavy enough to convey the message? Well those days are back! Ameritron, one of the USA's leading amateur power amplifier manufacturers has released an amplifier using three 811A tubes in Class AB2 grounded grid to deliver a clean, comfortable 600W PEP. The AL-811 amplifier needs only 40W of drive for the VK legal limit. Best of all the cost of running the AL-811 is low, and a new set of tubes will only cost $105 not $350 - $700 or more for other amplfiers using more exotic tubes.

- 600W PEP output
- All bands 160-10
- Three 811A tubes
- Quiet fan cooling
- Rugged construction
- 50Hz rated transformer
- Easy to use
- Vernier anode tuning
- Large twin meters
- Safety interlock

Ameritrons choice of the 811A is no accident, nor is it a purely economical one. The 811A has developed an envialbe reputation for robustness and reliability over many many years of operation in amateur and commercial service. Its directly heated thoriated tungsten filament is immune to cathode stripping which can ruin an expensive indirectly heated tube in a few milliseconds if the amplifier is mistuned.
Ameritron have chosen a simple yet extremely effective input circuit, a single Pi section with a slug-tuned coil for each position of the band switch. The slugs of the coils can be easily adjusted without removing the cover so that you can peak the amplifier without danger of being exposed to high voltage supplies.

AL-811 $1449.00 plus freight

Stewart Electronic Components Pty. Ltd.
ACN 004 518 898
44 Stafford Street Huntingdale : PO Box 281 Oakleigh 3166
Phone (03)543-3733
FAX (03)543-7238

HAMADS

TRADE ADS

● WEATHER FAX programs for IBM XT/ATs. RADFAX $35, is a high resolution shortwave weatherfax, morse & RTTY receiving program. Needs CGA, SSB hf radio & RADFAX decoder. Also RF2HERC, RF2EGA and RG2VGA, same as RADFAX2 but suitable for Hercules, EGA and VGA cards respectively. SATFAX $45, is a NOAA, Meteor and GMS weather satellite picture-receiving program. Uses EGA or VGA modes. Needs EGA or VGA colour monitor and card + WEATHER FAX PC card, + 137MHz receiver. All programs are on 5.25" or 3.5" disks (state which) & documentation, add $3 postage. ONLY from M Delahunty, 42 Villiers St, New Farm Qld 4005. Ph (07) 358 2785.

● AMIDON FERROMAGNETIC CORES: For LF/HF/VHF/UHF applications. Send DL size SASE for data/price to RJ & US Imports, Box 431, Kiama NSW 2533 (no enquiries at office, please ... 14 Boanyo Ave, Kiama). Agencies at: Geoff Wood Electronics, Sydney; Webb Electronics, Albury; Assoc TV Service, Hobart; Electronic Components, ACT; Truscott Electronics, Melbourne.

IBM-PC CLONES. AMTOR/RTTY/CW/FAX/SSTV. Your selection of modes supplied in one comprehensive program. Details from VK4ASB, 23 Darwin St, Aspley Qld 4034. Tel AH: (07) 263 8689.

FOR SALE — NSW

● ALL transistorised com RX band coverage 500kHz to 30MHz for AM, FM, CW. Brand new. Also one pair new headphones with individual vol controls. VK2AXR Al (02) 477 6275.

● RANK 1065 toner, suitable laser printers, refill your cartridge $5 ono. Varian Aerograph 1200 gas chromatograph (not working) (two). Any offers? Yaesu FT207R 2M handheld with battery, PA2 charger/adapter and speaker/mike. Noel VK2YXM (02) 871 3079.

● YAESU FRG7700 gen cov RX with FRA7700 ant amp in original carton with handbooks etc, $500. S/N 220909. Ray VK2FW QTHR (063) 65 3410.

● TRANSFORMERS HTX 3KV at 350mA primary taps to provide 1.5-2.0-2.5-3kV on sec, $110. Heater trans 2.5-0-2.5 at 15 amps $70. 4kV bridge rect to suit above $30. Ray VK2FW QTHR (063) 65 3410.

● SPECTRUM analyser Siemens model K2001 200Hz-4000Hz near new, $250. Also impedance bridge Siemens model R277 30Hz-1.6MHz resistance complex Jay-Gee-C+L, $200. Peter VK2CPK QTHR (02) 411 1227.

● ICOM IC730 with IC HM7 & IC HM10 mics, $750. ICOM 251A, $500. ICOM IC2A with speaker-mic, $275. Azden PCS400, $350. Manual for above equipment available if required. VK2KAN, PO Box 1767, Tamworth 2340.

● TOWER tilt-over 70ft freestanding fully galvanised, $1000. Kenwood TS820S ex/VFO handbook, $500. Heathkit monitor, $150. Audio generator, $80. Various mobile whips from $50. All items open for offers. Horst VK2HL QTHR.

● TET HB35C 5-element beam, complete with fittings, GC, owner moved interstate, $300. VK2AHJ George (02) 878 2278.

● ATTENTION radio clubs! Thinking of setting up a 70cm repeater? I have just what you need. A NEC base station with separate transmitter, receiver, 8-cavity duplexer, Xtal ovens, 10 watts output, $400. VK2ATU (02) 792 2275.

FOR SALE - VIC

● MALDOL HS:260 Pwr/SWR meter 3.5-150MHz range, VGC, $40. Paul VK3EPD (059) 83 1771.

● SPEAKER Kenwood SP120 ser no 0050062, as new cond, best offer. VK3GI (054) 27 2576.

● YAESU FT901D $625. Also FT101B, $400. Ham 3 rotator, fully recond, $425. Chas VK3BRZ (052) 82 3167 AH only.

● ATN 9-ele log period antenna 13-30MHz, all stainless hardware. Cost $1145 sell $750. Create RC5A-2 worm drive heavy duty rotator, cost $965 sell $550. Both less than 12 months old. VK3BCY Morrison QTHR (056) 89 1205.

FOR SALE - QLD

● CHEAP quad antennas and components 2el 15m spider quad, 4el 15m and 6el 10m spider quad, both all alloy and fibreglass. 16 fibreglass blanks, alloy quad spiders (6). Prices negotiable. 5-band vertical antenna, $90. VK4CMY (076) 61 7494.

● YAESU FT208R 2m rig with manual, rubber whip antenna 10 memories GC, ideal for packet, $200. VK4ARB QTHR (07) 269 8848.

FOR SALE - SA

● YAESU FT400 tranx, spare new finals spkr, mike, manual, s/n SO53915, $250. (08) 381 5676.

● 70-FOOT Southern Cross antenna tower in dismantled state, $1000. VK5BTA QTHR (08) 332 1381.

● KLM KT34XA six element tribander, $200 or offer. VK5RN (08) 339 1210.

FOR SALE - TAS

● KENWOOD TS520S fitted with CW filter, complete with 2xGE 6146B spare finals, MC50 desk mic, handbook, service manual, all perf cond. Has been on low power all its life, $450. David VK7ZDJ (004) 25 2030.

WANTED - NSW

● ICOM model UX14 C1-IV/C1-V converter. Art VK2AS QTHR (02) 416 7784.

WANTED - VIC

● TONO 9000E RTTY terminal. Will pay top price. Roc VK3AKN QTHR (03) 336 7992.

● YAESU FT301 tuner. Hawthorn EAST. VK3EB QTHR.

● MC50 base mic Oskerblock SWR200 Paul VK3EPD (059) 83 1771.

WANTED - QLD

● KW2000 manual or info circuits for KW Electronics 2000 txcvr. Will pay costs for copies, postage. (07) 390 7762.

● RECEIVER Eddystone EALZ amateur band only; Vibroplex or other 'bug' key, any cond; pair 8950 valves, EC; old tribander TA33 or similar for experiments; Heathkit HD610 coax switch; old ARRL handbooks. Contact Doc (076) 61 7494 AH, (076) 61 6200 BH.

● FOR cassette player used or new drive motor, Sankyo VFA2L73 00701-A or similar. Help all costs met. VK4UA (075) 46 7041.

WANTED - SA

● TWO-METRE linear Daiwa LA2080H VK5XT QTHR (085) 56 5881.

WANTED - WA

● PAIR of 6146Bs, new or good used cond. Alec VK6BEB QTHR (098) 41 7773.

WANTED - TAS

● FT301 ATU, must be in good cond, with manual and circuit. Required to complete 301 station. Contact David VK7ZDJ (004) 25 2030.

Sign up a new WIA member today - we need the numbers to protect our frequencies.

The Eavesdroppers

Signals Intelligence in the South-West Pacific Area - World War II – Jack Bleakley

ISBN 0 644 22303 0
Australian Government Publishing Service, Canberra ACT

The Eavesdroppers is an excellent exposition of the part signals intelligence played in the defeat of the Japanese in the south-west Pacific area (SWPA) by the Allied Forces.

It is of particular interest to the amateur fraternity as many radio hams played an important part in these activities.

The author, Jack Bleakley, who served as an intercept operator in the New Guinea and Philippines campaigns, gives a finely balanced account of the experiences of the operators together with the strategy of the American and Australian forces.

The operators used equipment well known to operators of the 1939-40 era, namely SX28s, HROs and AR7s, which performed very reliably in the rigourous tropical conditions.

The Japanese Kana code used for the transmission of messages by W/T comprised 71 Kana Morse symbols as against the International Code of 26 alphabet characters. An operating speed of 40-50wpm was commonplace. Furthermore, you couldn't ask for repeats when you were intercepting a message.

Maybe our novice and AOCP Morse speeds are not so unattainable after all!

The book is well written in easy-to-read chapters. Each chapter has a single map before it showing the main locations discussed, and the text starts with a summary of the strategy of the Allied Forces at that particular part of the campaign.

Thus the reader is carried along with the astounding impetus of the island-hopping campaign in the SWPA right through to the Philippines and thence to the surrender of Japan, without having to backtrack to previous chapters and maps to find out what the author is discussing.

General Willoughby, who was Macarthur's Chief G2 (Intelligence) said soon after the defeat of Japan that Signal Intelligence chopped two years off the war in the Pacific.

The book is a paperback of handy size - 23mm x 14mm - comprises 261 pages and is available from the AGPS Mail Order Sales, GPO Box 84 Canberra ACT 2601. Commonwealth Government bookshops in our capital cities and major bookstores at a RRP of $12.95

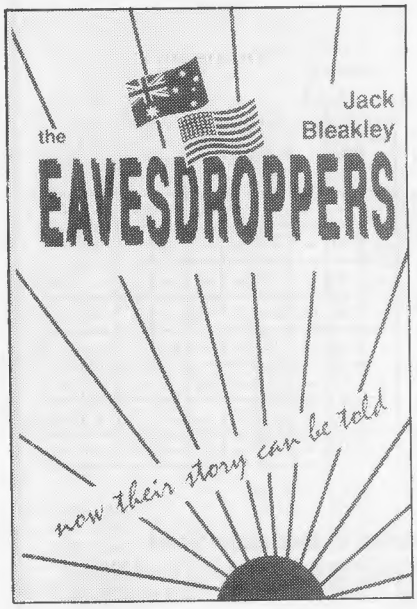

(postage included).

A bargain read!

Reviewed by Quintin Foster L30720 (who is too modest to admit that he himself was in the "thick of it"! - Ed).

Hamads

Please Note: If you are advertising items For Sale and Wanted please use a separate form for each. Include all details; eg Name, Address, Telephone Number (and STD code), on both forms. Please print copy for your Hamad as clearly as possible.
*Eight lines per issue free to all WIA members, ninth line for name and address
Commercial rates apply for non—members. Please enclose a mailing label from this magazine with your Hamad.
*Deceased Estates: The full Hamad will appear in AR, even if the ad is not fully radio equipment.
*Copy typed or in block letters to PO Box 300, Caulfield South, Vic 3162, by the deadline as indicated on page 1 of each issue.
*QTHR means address is correct as set out in the WIA current Call Book.

*WIA policy recommends that Hamads include the serial number of all equipment offered for sale.
*Please enclose a self addressed stamped envelope if an acknowledgement is required that the Hamad has been received.
Ordinary Hamads submitted from members who are deemed to be in general electronics retail and wholesale distributive trades should be certified as referring only to private articles not being re—sold for merchandising purposes.
Conditions for commercial advertising are as follows: $25.00 for four lines, plus $2.25 per line (or part thereof) Minimum charge — $25.00 pre—payable.

State: .....

Not for publication: ❑ Miscellaneous ❑ For Sale ❑ Wanted

Name:..... Call Sign: ..... Address: .....

Solution to Morseword No 64

Page 51

	1	2	3	4	5	6	7	8	9	10
1	—	—	•	•	—	•	•	•	—	•
2	•	•	•	—	•	•	•	•	—	•
3	•	—	•	•	•	—	•	—	•	•
4	•	•	•	•	•	•	—	•	—	•
5	•	•	•	—	•	—	—	•	—	—
6	—	•	—	—	•	—	—	•	—	•
7	•	—	—	—	—	—	—	•	—	•
8	•	•	•	•	•	—	•	—	•	•
9	•	—	•	•	•	—	—	•	•	—
10	•	—	•	•	•	•	—	•	•	—

Solution for Morseword No 64

Across: 1 green; 2 Steve; 3 rued; 4 hear; 5 stay; 6 Yemen; 7 woke; 8 Hal; 9 Riga; 10 silt.

Down: 1 base; 2 cur; 3 sub; 4 rams; 5 nests; 6 fog; 7 vow; 8 feel; 9 gob; 10 slat.

TRADE PRACTICES ACT

It is impossible for us to ensure the advertisements submitted for publication comply with the Trade Practices Act 1974. Therefore advertisers and advertising agents will appreciate the absolute need for themselves to ensure that, the provisions of the Act are complied with **strictly.**

VICTORIAN CONSUMER AFFAIRS ACT

All advertisers are advised that advertisements containing only a PO Box number as the address cannot be accepted without the addition of the business address of the boxholder or seller of the goods.

TYPESETTING : Magazine Graphics, PO Box 72, Caulfield Sth, 3162, Ph: 528 1033

PRINTING: Industrial Printing, Richmond

MAIL DISTRIBUTION: R L Polk & Co Pty Ltd, PO Box 140, Collingwood, Vic. 3066, Tel:(03) 417 5161

The opinions expressed in this publication do not necessarily reflect the official view of the WIA, and the WIA cannot be held responsible for incorrect information published.

ADVERTISERS INDEX JULY 1992

Amateur Radio Action 22
ATN Antennas 26
Dick Smith Electronics 31-33
Electronics Assembly Co. 18
Electronics World Disposals ..13
ICOM .....OBC
Jenlex Filters 11
Kenwood Electronics .....IFC
Stewart Electronics 52
WIA Bookshops .....IBC
WIA NSW Division 34

Trade HAMADS

M. Delahunty 54
D Ralph 54
RJ & US Imports 54

HOW TO JOIN THE WIA

Fill out the following form and send to:

The Membership Secretary
Wireless Institute of Australia
PO Box 300
Caulfield South, Vic 3162

I wish to obtain further information about the WIA.

Mr, Mrs, Miss, Ms: .....

.....

Call Sign (if applicable): .....

Address: .....

.....

.....

State and Postcode: .....

VK QSL Bureaux

The official list of VK QSL Bureaux. All are Inwards and Outwards unless otherwise stated.

VK1	GPO Box 600 Canberra ACT 2601
VK2	PO Box 73 Teralba NSW 2284
VK3	40G Victory Blvd, Ashburton Vic 3147
VK4	GPO Box 638 Brisbane Qld 4001
VK5	PO Box 10092 Gouger St Adelaide SA 5000
VK6	GPO Box F319 Perth WA 6001
VK7	GPO Box 371D Hobart Tas 7001
VK8	C/o H G Anderson VK8HA Box 619 Humpty Doo NT 0836
VK9/VK0	C/o Neil Penfold VK6NE 2 Moss Court Kingsley WA 6026

WIA Divisional Bookshops

The following items are available from your Division's Bookshop
(see the WIA Division Directory on page 3 for the address of your Division)

	Ref	Price to Members
ANTENNA BOOKS		
Ant. Compendium Vol 2 Software only	BX293	$18.00
Antenna Compendium Vol 1 ARRL	BX163	$19.80
Antenna Compendium Vol 2 & Software ARRL	BX294	$32.40
Antenna Compendium Vol 2 ARRL	BX292	$21.60
Antenna Impedance Matching - ARRL - 1989	BX257	$27.00
Antenna Note Book W1FB - ARRL - 1987	BX179	$18.00
Antenna Pattern Worksheets Pkt of 10 - ARRL	BX211	$5.40
Antennas 2nd ed John Kraus - 1988	BX259	$93.60
Beam Antenna Handbook - New ED. 1990 Orr	BX215	$23.00
Easy Up Antennas	MFJ38	$35.30
HF Antennas - Moxon RSGB - 1988	BX188	$27.00
Novice Antenna Notebook DeMaw - ARRL	BX162	$14.40
Practical Wire Antennas - RSGB	BX296	$25.20
Reflections - Software 5in disk	BX358	$18.00
Reflections - Transmission lines The Book - ARRL - 1990	BX348	$36.00
Simple Low Cost Wire Antennas	BX218	$23.00
Smith Chart Expanded Scale PK of 10	BX903	$5.90
Smith Charts S/Scale 1 Set co-ord Imp/Admir Pack of 10	BX900	$5.90
Smith Charts Stand Scale 1 SET Co-or. PK of 10	BX900	$5.90
The Antenna Handbook - ARRL1991, 16th edition	BX370	$36.00
The Truth About CB Antennas - Orr	BX219	$23.00
Transmission Line Transformers - ARRL 2nd edition	BX329	$36.00
Vertical Antenna Handbook - Lee - 1990	BX284	$16.70
Yagi Antenna Design - ARRL - 1986	BX164	$27.00
ATV BOOKS		
The ATV Compendium - BATC	BX270	$15.80
CALL BOOKS		
Radio Call Book International	BX339	$57.60
Radio Call Book North America	BX338	$57.60
FICTION		
CQ Brings Danger - ARRL	BX206	$9.40
CQ Ghost Ship - ARRL	BX204	$9.40
Death Valley QTH - ARRL	BX205	$9.40
Grand Canyon QSO - ARRL	BX207	$9.40
Murder By QRM - ARRL	BX208	$9.40
SOS At Midnight - ARRL	BX209	$9.40
HANDBOOOKS		
ARRL Handbook – 1992	BX369	$47.60
Electronics Data Book - ARRL - 1988	BX201	$21.60
Mobile Radio Handbook	MFJ33	$22.50
Motorola RF Device Data - 2 Volumes	BX47	$23.00
Radio Communication Handbook - RSGB	BX266	$50.40
Radio Handbook 23rd edition - Bill Orr	BX224	$53.90
Radio Theory For Amateur Operators - Swainston - 1991	BX265	$38.70
HISTORY		
200 Meters and Down 1936 - ARRL	BX198	$7.20
50 Years of the ARRL - 1981	BX196	$7.20
Big Ear - Autobiography Of John Kraus W8JK - 1976	BX363	$11.30
Golden Classics of Yesterday - Ingram	MFJ30	$19.40
Spark to Space - ARRL 75th Anniversary - 1990	BX310	$36.00
INTERFERENCE BOOKS		
Interference Handbook - Nelson - 1989	BX181	$23.00
Radio Frequency Interference - ARRL	BX186	$27.00
MISCELLANEOUS		
Amidon Ferrite Complete Data Book	BX44	$9.00
Design Notebook W1FR - ARRL	BX357	$18.00
Ham Radio Communications Circuit Files	MFJ37	$22.50
Help For New Hams DeMaw - ARRL	BX308	$18.00
Hints and Kinks 12th edition - ARRL	BX330	$14.40
Novice Notes, The Book - ARRL QST	BX298	$10.80
QRP Classics - ARRL QST	BX323	$21.60
QRP Note Book - New 2nd edition ARRL	BX170	$18.00
Radio Astronomy 2nd edition - John D Kraus	BX262	$71.90
Radio Auroras RSGB New 1991	BX381	$27.00
Radio Buyers Source Book – ARRL – 1991	BX377	$27.00
Shortwave Receivers Past and Present	BX253	$19.80
Solid State Design - DeMaw ARRL	BX171	$21.60
MORSE CODE		
Advanced Morse Tutor - 3.5 inch Disk	BX328	$36.00
Advanced Morse Tutor - 5.25 inch Disk	BX328	$36.00
Morse Code 6 Tapes Novice Code Course - Gordon West	BX229	$63.90

	Ref	Price to Members
MORSE CODE (Contd)		
Morse Code Tapes Set 1: 5-10 WPM - ARRL	BX331	$16.70
Morse Code Tapes Set 2: 10-15 WPM - ARRL	BX332	$16.70
Morse Code Tapes Set 3: 15-22 WPM - ARRL	BX333	$16.70
Morse Code Tapes Set 4: 13-14 WPM - ARRL	BX334	$16.70
Morse Tutor 5.25 inch IBM Disk	BX187	$18.00
OPERATING		
Amateur Radio Awards Book - RSGB	BX297	$27.00
DXCC Companion	BX345	$10.80
FCC Rule Book A Guide to the FCC Regulations	BX379	$16.20
Low Band DXing - John Devoldere	BX195	$18.00
Maidenhead Locator-Grid Atlas - ARRL	BX197	$9.00
Operating Manual - ARRL - 1990 3rd Edition	BX192	$27.00
Operating Manual - RSGB - 1985 3rd Edition	BX359	$25.20
Passport to World Band Radio 1991	BX346	$30.60
Prefix Map of North America	BX235	$7.20
Short Wave Propagation Handbook	BX268	$16.70
The Complete DXer - Bob Locher - 1989	BX194	$18.00
Transmitter Hunting - TAB - 1987	BX222	$32.30
PACKET RADIO BOOKS		
AX.25 Link Layer Protocol - ARRL	BX178	$14.40
Computer Networking Con (Packet) No 5 1986 - ARRL	BX167	$18.00
Computer Networking Con (Packet) No 6 1987 - ARRL	BX168	$18.00
Computer Networking Con (Packet) No 7 1988 - ARRL	BX184	$22.50
Computer Networking Con (Packet) No 8 1989 - ARRL	BX295	$21.60
Computer Networking Con (Packet) No 9 1990 - ARRL	BX360	$21.60
Computer Networking Con (Packet) No 10 1991 - ARRL	BX387	$22.50
Computer Networking Conf (Packet) 1-4 1982/5	BX166	$32.40
Gateway to Packet Radio 2nd edition - ARRL	BX169	$21.60
Packet Radio Made Easy - Rogers	MFJ32	$18.50
SATELLITE BOOKS		
Oscar Satellite Review - Ingram	MFJ31	$15.30
Satellite AMSAT-NA 5th Symposium 1987 - ARRL	BX182	$15.80
Satellite AMSAT-NA 6th Symposium - ARRL	BX199	$15.80
Satellite Anthology - ARRL	BX180	$14.40
Satellite Experimenters Handbook 1990 edition	BX177	$36.00
Space Almanac – ARRL – 1990	BX299	$36.00
Weather Satellite Handbook - ARRL	BX324	$36.00
Weather Satellite Handbook Software only - ARRL	BX326	$18.00
VHF/UHF/MICROWAVE		
All About VHF Amateur Radio - Orr - 1988	BX216	$23.00
Microwave Handbook Vol 1 - RSGB - 1989	BX318	$63.00
Microwave Handbook Vol 2 – RSGB – 1992	BX437	$63.00
Microwave Update Con. 1987 - ARRL	BX174	$15.80
Microwave Update Con. 1988 - ARRL	BX183	$15.80
Microwave Update Con. 1989 - ARRL	BX321	$21.60
Mid Atlantic VHF Con. October 1987 - ARRL	BX175	$15.80
Spread Spectrum Source Book - ARRL - 1991	BX365	$36.00
UHF Compendium Part 1 & 2 Vol 1	BX250	$67.50
UHF Compendium Part 3 & 4 Vol 2	BX251	$67.50
UHF Compendium Part 5 German Only	BX354	$50.20
UHF/Microwave Experimenters Manual - ARRL - 1990	BX325	$36.00
UHF/Microwave Experimenters Software 5 inch Disk - ARRL	BX327	$18.00
VHF 21st Central States Con. 1987 - ARRL	BX172	$15.80
VHF 22nd Central States Con. 1988 - ARRL	BX173	$15.80
VHF 23rd Central States Con. 1989 - ARRL	BX286	$15.80
VHF 24th Central States Con. 1990 - ARRL	BX322	$21.60
VHF/UHF Manual - RSGB	BX267	$43.20
WIA MEMBERS SUNDRIES		
Log Book Covers		$16.00
WIA Badge - Diamond		$4.00
WIA Badge - Diamond With Call Sign Space		$4.00
WIA Badge - Traditional Blue		$4.00
WIA Badge - Traditional Red		$4.00
WIA Car Window Stickers		$0.50
WIA Tape - Sounds of Amateur Radio		$7.00
WIA PUBLICATIONS		
Australian Radio Amateur Call Book - 1992		$10.00
Band Plans Booklet		$2.80
WIA Log Book - Horizontal or Vertical Format		$5.00
WIA Novice Study Guide		$1.50

Not all items above are available from all Divisions (and none is available from the Executive Office).
If the item is carried by your Divisional Bookshop, but is not in stock, your order will be taken and filled as soon as practicable.
All prices are for WIA members only – postage and packing, if applicable, is extra.
All orders must be accompanied by a remittance.

ICOM

Count on us!

IC-765

Our Base Units Have So Many Features, These Pictures Speak Louder Than Words.

IC-781

Our features speak volumes.

Rather than write hundreds of words to introduce our range of base units, we'd like you to phone us free on (008) 338 915.

We'll provide you with detailed brochures and the name of your nearest authorised Icom dealer.

Alternatively, you can write to Reply Paid 1009 Icom Australia Pty Ltd P.O. Box 1162 Windsor Victoria 3181.

Telephone (03) 529 7582 A.C.N. 006 092 575

L.L. Brown Advertising 3909

VOL 60, NO 7, JULY 1992

Registered by Australian Post - Publication No VBH-0569